PDF PAGE	CSA PAGE	CONTENTS	SYNC MASTER	DATE
2	2	H5P JTAG, USB ,PLL	N/A	N/A
3	3	H5P GPIO & CONTROL	N/A	N/A
4	4	H5P IO POWER	N/A	N/A
5	5	H5P SOC/CPU/SRAM PWR	N/A	N/A
6	6	H5P W/ NAND	N/A	N/A
7	7	H5P VIDEO	N/A	N/A
8	8	BUTTON FLEX B2B	N/A	N/A
9	9	L81 AUDIO CODEC	N/A	N/A
10	10	CG FLEX B2B	N/A	N/A
11	12	AGATHA PMU(1/2)	N/A	N/A
12	13	AGATHA PMU(2/2)	N/A	N/A
13	14	CHESTNUT + BACKLIGHT DRIVER	N/A	N/A
14	15	SPKR AMP + LED DRIVER	N/A	N/A
15	16	TRISTAR	N/A	N/A
16	17	DOCKFLEX B2B	N/A	N/A
17	18	D404 (TOUCH B2B, DRIVER ICS)	N/A	N/A
18	19	LCM CONNECTOR	N/A	N/A
19	20	OSCAR + SENSORS	N/A	N/A
20	21	CAM0 CONNECTOR	N/A	N/A
21	22	BATT B2B, TPS, PD FEATURES	N/A	N/A
22	23	RADIO_MLB HIERARCH. SYMBOL	N/A	N/A

SCH 051-0143
BRD 820-3581

BOM 639-4501

iPhone 5C Schematics

Dewatermarked &
Released Free
From Texas with Love.

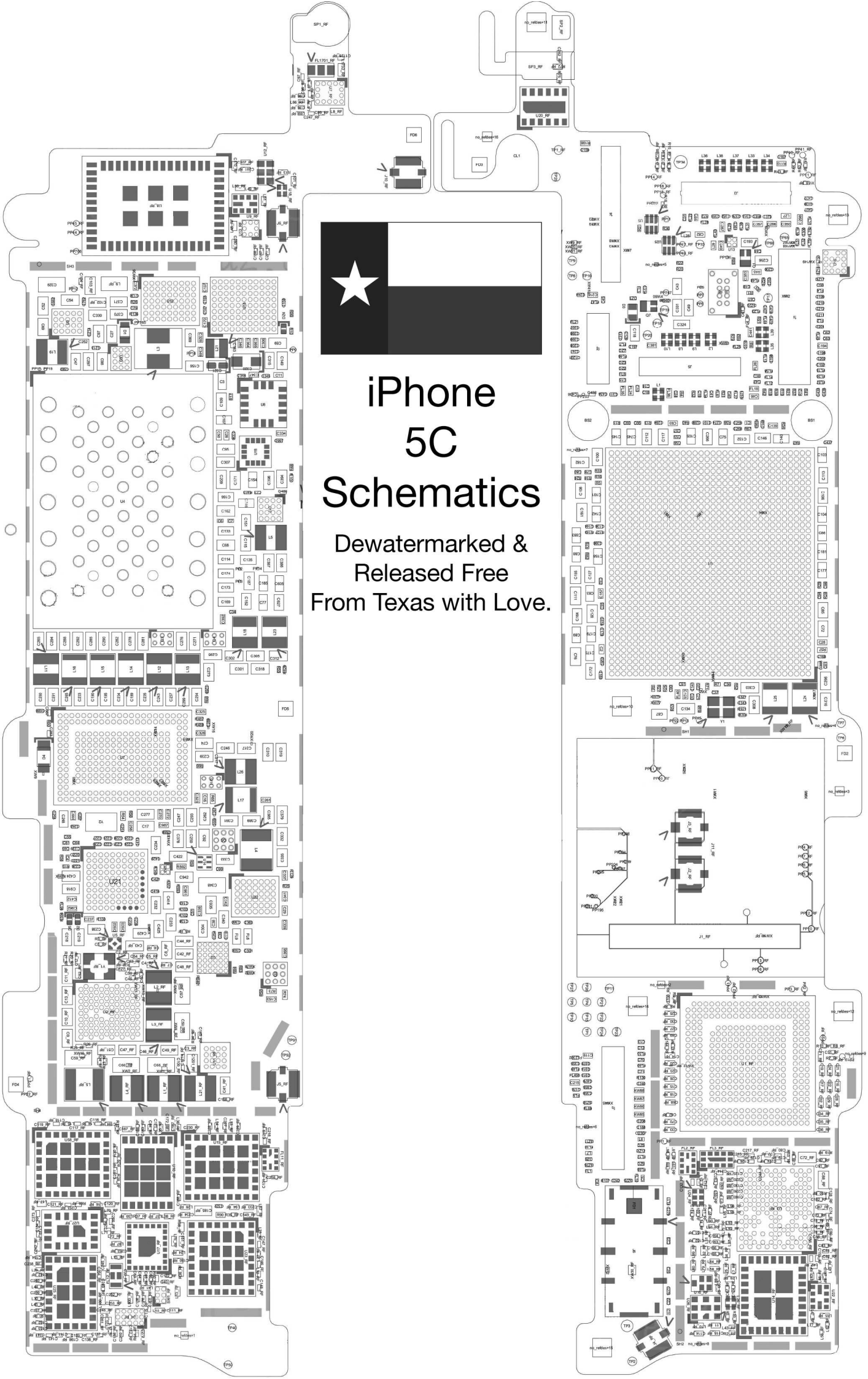

iPhone 5C Schematics

Dewatermarked & Released Free From Texas with Love.

PDF PAGE	CSA PAGE	CONTENTS	SYNC MASTER	DATE
2	2	H5P JTAG, USB ,PLL	N/A	N/A
3	3	H5P GPIO & CONTROL	N/A	N/A
4	4	H5P IO POWER	N/A	N/A
5	5	H5P SOC/CPU/SRAM PWR	N/A	N/A
6	6	H5P W/ NAND	N/A	N/A
7	7	H5P VIDEO	N/A	N/A
8	8	BUTTON FLEX B2B	N/A	N/A
9	9	L81 AUDIO CODEC	N/A	N/A
10	10	CG FLEX B2B	N/A	N/A
11	12	AGATHA PMU(1/2)	N/A	N/A
12	13	AGATHA PMU(2/2)	N/A	N/A
13	14	CHESTNUT + BACKLIGHT DRIVER	N/A	N/A
14	15	SPKR AMP + LED DRIVER	N/A	N/A
15	16	TRISTAR	N/A	N/A
16	17	DOCKFLEX B2B	N/A	N/A
17	18	D404 (TOUCH B2B, DRIVER ICS)	N/A	N/A
18	19	LCM CONNECTOR	N/A	N/A
19	20	OSCAR + SENSORS	N/A	N/A
20	21	CAM0 CONNECTOR	N/A	N/A
21	22	BATT B2B, TPS, PD FEATURES	N/A	N/A
22	23	RADIO_MLB HIERARCH. SYMBOL	N/A	N/A

SCH 051-0143
BRD 820-3581

BOM 639-4501

iPhone 5C Schematics

Dewatermarked &
Released Free
From Texas with Love.

CG FLEX B2B

(FF CAM, PROX, ALS, RECEIVER, ANC ERROR MIC)

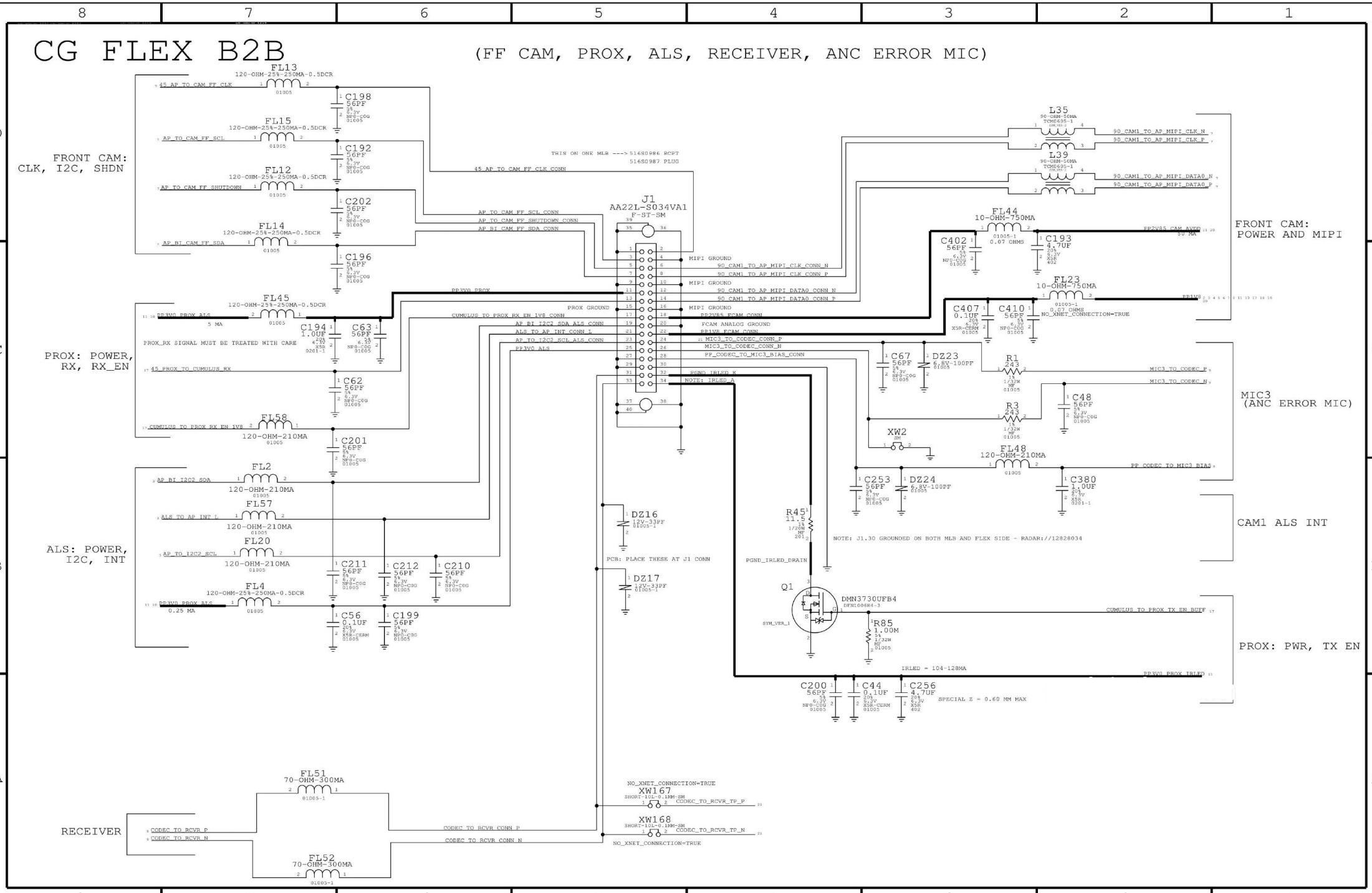

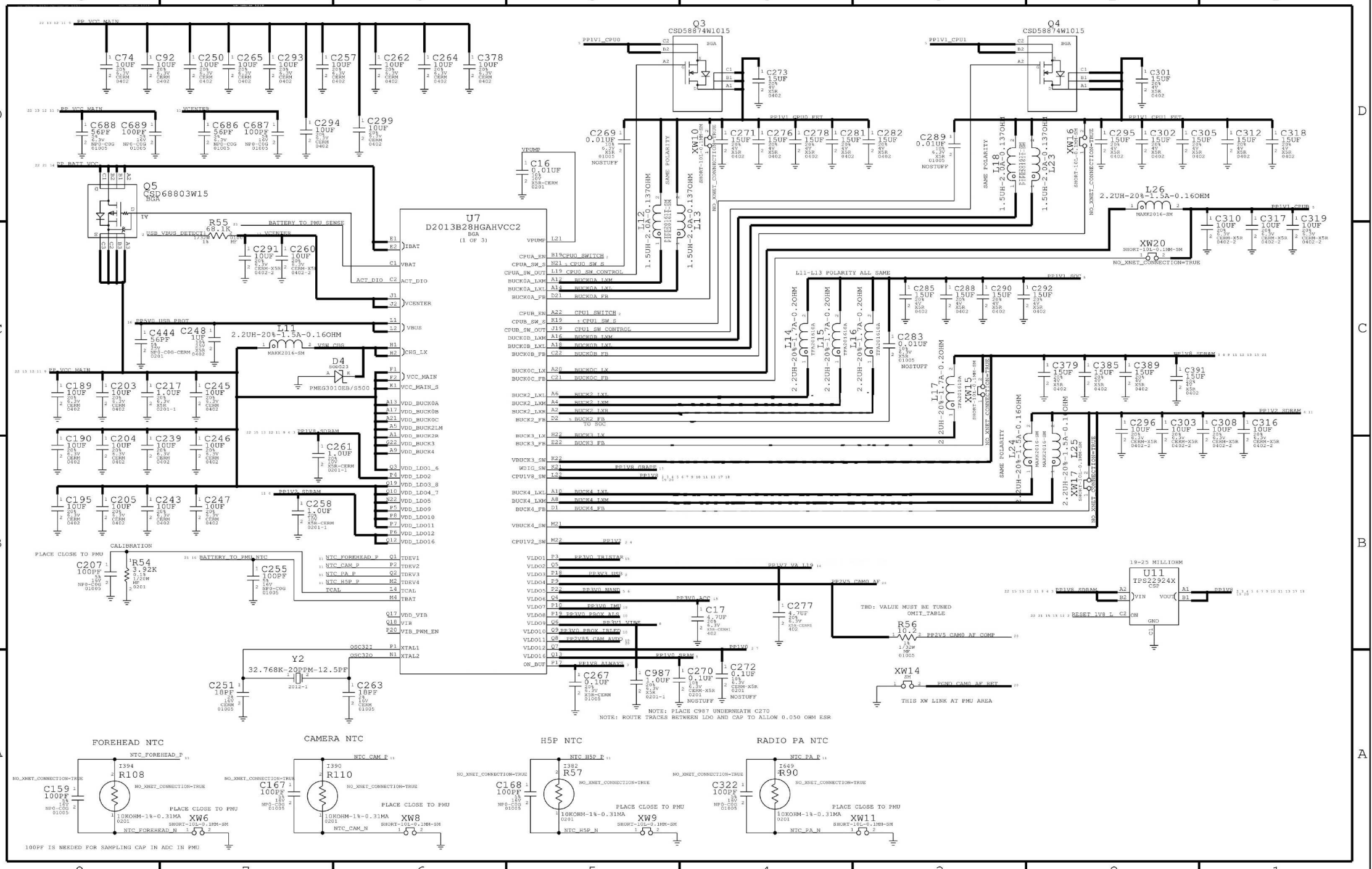
U7
D2013B28HGAHVCC2
BGA
(1 OF 3)
Q3
CSD58874W1015
Q4
CSD58874W1015
Q5
CSD68803W15
BGA
U11
TPS22924X
CSP
19-25 MILLIOHM
Y2
32.768K-20PPM-12.5PF
2012-1
D4
SOD523
PMEG3010EB/S500
L11
2.2UH-20%-1.5A-0.16OHM
MAKK2016-SM
L26
2.2UH-20%-1.5A-0.16OHM
MAKK2016-SM
L12
1.5UH-2.0A-0.137OHM
L13
1.5UH-2.0A-0.137OHM
L18
1.5UH-2.0A-0.137OHM
L23
1.5UH-2.0A-0.137OHM
L14
2.2UH-20%-1.7A-0.20HM
L15
2.2UH-20%-1.7A-0.20HM
L16
2.2UH-20%-1.7A-0.20HM
L17
2.2UH-20%-1.7A-0.20HM
L24
2.2UH-20%-1.5A-0.16OHM
L25
2.2UH-20%-1.5A-0.16OHM
XW10
XW16
XW20
XW15
XW17
XW14
XW6
XW8
XW9
XW11
R55
68.1K
R54
3.92K
R56
10.2
R108
R110
R57
R90
C16
0.01UF
C269
0.01UF
C289
0.01UF
C283
0.01UF
C261
1.0UF
C258
1.0UF
C277
4.7UF
C17
4.7UF
C267
0.1UF
C987
1.0UF
C270
0.1UF
C272
0.1UF
C251
18PF
C263
18PF
C207
100PF
C255
100PF
C159
100PF
C167
100PF
C168
100PF
C322
100PF
PP VCC MAIN
PP BATT VCC
VCENTER
PP5V0 USB PROT
PP1V8 SDRAM
PP1V2 SDRAM
PP1V1 CPU0 FET
PP1V1 CPU1 FET
PP1V1 CPU0
PP1V1 CPU1
PP1V1 SOC
PP1V2 SDRAM
PP3V0 TRISTAR
PP3V3 USB
PP3V0 NAND
PP3V0 ACC
PP3V0 PROX ALS
PP3V1 VIBE
PP3V0 PROX IRLED
PP2V5 CAM AVDD
PP1V8 ALWAYS
PP1V0 SRAM
PP1V7 VA L19
PP2V5 CAM0 AF
PP2V5 CAM0 AF COMP
EGND CAM0 AF RET
RESET 1V8 L
BATTERY TO PMU SENSE
USB VBUS DETECT
ACT DIO
CALIBRATION
PLACE CLOSE TO PMU
BATTERY TO PMU NTC
NTC FOREHEAD P
NTC CAM P
NTC PA P
NTC H5P P
TCAL
OSC32I
OSC32O
CPU0 SWITCH
CPU0 SW S
CPU0 SW CONTROL
CPU1 SWITCH
CPU1 SW S
CPU1 SW CONTROL
BUCK2 FB
TO SOC
L11-L13 POLARITY ALL SAME
SAME POLARITY
NO_XNET_CONNECTION=TRUE
TBD: VALUE MUST BE TUNED
OMIT_TABLE
THIS XW LINK AT PMU AREA
NOTE: PLACE C987 UNDERNEATH C270
NOTE: ROUTE TRACES BETWEEN LDO AND CAP TO ALLOW 0.050 OHM ESR
FOREHEAD NTC
CAMERA NTC
H5P NTC
RADIO PA NTC
10KOHM-1%-0.31MA
100PF IS NEEDED FOR SAMPLING CAP IN ADC IN PMU

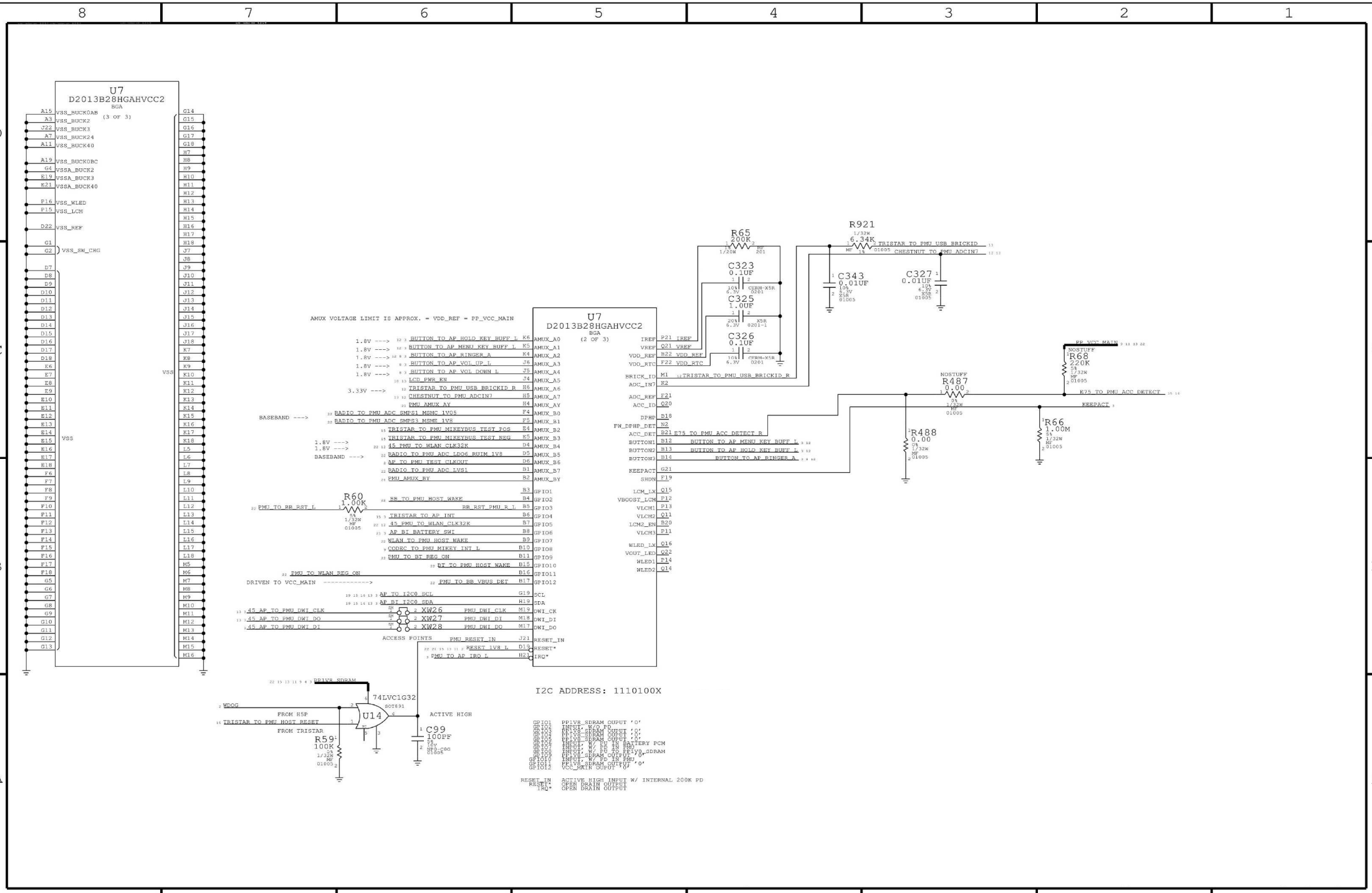
U7
D2013B28HGAHVCC2
BGA
(3 OF 3)
VSS_BUCK0AB
VSS_BUCK2
VSS_BUCK3
VSS_BUCK24
VSS_BUCK40
VSS_BUCK0BC
VSSA_BUCK2
VSSA_BUCK3
VSSA_BUCK40
VSS_WLED
VSS_LCM
VSS_REF
VSS_SW_CHG
VSS
U7
D2013B28HGAHVCC2
BGA
(2 OF 3)
AMUX VOLTAGE LIMIT IS APPROX. = VDD_REF = PP_VCC_MAIN
BUTTON_TO_AP_HOLD_KEY_BUFF_L
BUTTON_TO_AP_MENU_KEY_BUFF_L
BUTTON_TO_AP_RINGER_A
BUTTON_TO_AP_VOL_UP_L
BUTTON_TO_AP_VOL_DOWN_L
LCD_PWR_EN
TRISTAR_TO_PMU_USB_BRICKID_R
CHESTNUT_TO_PMU_ADCIN7
PMU_AMUX_AY
RADIO_TO_PMU_ADC_SMPS1_MSMC_1V05
RADIO_TO_PMU_ADC_SMPS3_MSME_1V8
TRISTAR_TO_PMU_MIKEYBUS_TEST_POS
TRISTAR_TO_PMU_MIKEYBUS_TEST_NEG
45_PMU_TO_WLAN_CLK32K
RADIO_TO_PMU_ADC_LDO6_RUIM_1V8
AP_TO_PMU_TEST_CLKOUT
RADIO_TO_PMU_ADC_LVS1
PMU_AMUX_BY
SB_TO_PMU_HOST_WAKE
TRISTAR_TO_AP_INT
45_PMU_TO_WLAN_CLK32K
AP_BI_BATTERY_SWI
WLAN_TO_PMU_HOST_WAKE
CODEC_TO_PMU_MIKEY_INT_L
PMU_TO_BT_REG_ON
BT_TO_PMU_HOST_WAKE
PMU_TO_WLAN_REG_ON
PMU_TO_BB_VBUS_DET
AP_TO_I2C0_SCL
AP_BI_I2C0_SDA
45_AP_TO_PMU_DWI_CLK
45_AP_TO_PMU_DWI_DO
45_AP_TO_PMU_DWI_DI
PMU_RESET_IN
RESET_1V8_L
PMU_TO_AP_IRQ_L
TREF
VREF
VDD_REF
VDD_RTC
BRICK_ID
ADC_IN7
ADC_REF
ACC_ID
DPHP
FW_DPHP_DET
ACC_DET
BUTTON1
BUTTON2
BUTTON3
KEEPACT
SHDN
LCM_LX
VBOOST_LCM
VLCM1
VLCM2
LCM2_EN
VLCM3
WLED_LX
VOUT_LED
WLED1
WLED2
AMUX_A0
AMUX_A1
AMUX_A2
AMUX_A3
AMUX_A4
AMUX_A5
AMUX_A6
AMUX_A7
AMUX_AY
AMUX_B0
AMUX_B1
AMUX_B2
AMUX_B3
AMUX_B4
AMUX_B5
AMUX_B6
AMUX_B7
AMUX_BY
GPIO1
GPIO2
GPIO3
GPIO4
GPIO5
GPIO6
GPIO7
GPIO8
GPIO9
GPIO10
GPIO11
GPIO12
SCL
SDA
DWI_CK
DWI_DI
DWI_DO
RESET_IN
RESET*
IRQ*
R65
200K
1/20W
C323
0.1UF
C325
1.0UF
C326
0.1UF
R921
6.34K
TRISTAR_TO_PMU_USB_BRICKID
CHESTNUT_TO_PMU_ADCIN7
C343
0.01UF
C327
0.01UF
PP_VCC_MAIN
R68
220K
NOSTUFF
R487
0.00
E75_TO_PMU_ACC_DETECT
KEEPACT
R488
0.00
R66
1.00M
R60
1.00K
PMU_TO_BB_RST_L
BB_RST_PMU_R_L
XW26
XW27
XW28
ACCESS POINTS
DRIVEN TO VCC_MAIN
PP1V8_SDRAM
74LVC1G32
U14
WDOG
FROM H5P
TRISTAR_TO_PMU_HOST_RESET
FROM TRISTAR
ACTIVE HIGH
C99
100PF
R59
100K
I2C ADDRESS: 1110100X
GPIO1 PP1V8_SDRAM OUPUT '0'
GPIO2 INPUT, W/O PD
GPIO3 PP1V8_SDRAM OUPUT '0'
GPIO4 PP1V8_SDRAM OUPUT '0'
GPIO5 PP1V8_SDRAM OUPUT '0'
GPIO6 INPUT, W/ PU IN BATTERY PCM
GPIO7 INPUT, W/ PU IN PMU
GPIO8 INPUT, W/ PU IN PP1V8_SDRAM
GPIO9 PP1V8_SDRAM OUPUT '0'
GPIO10 INPUT, SDRAM IN PMU
GPIO11 PP1V8_SDRAM OUPUT '0'
GPIO12 VCC_MAIN OUPUT '0'
RESET_IN ACTIVE HIGH INPUT W/ INTERNAL 200K PD
RESET* OPEN DRAIN OUTPUT
IRQ* OPEN DRAIN OUTPUT

CHESTNUT, BACKLIGHT DRIVER

D404 DISPLAY PMU (INTERSIL CHESTNUT, 338S1168)
(TI CHESTNUT, 338S1172)

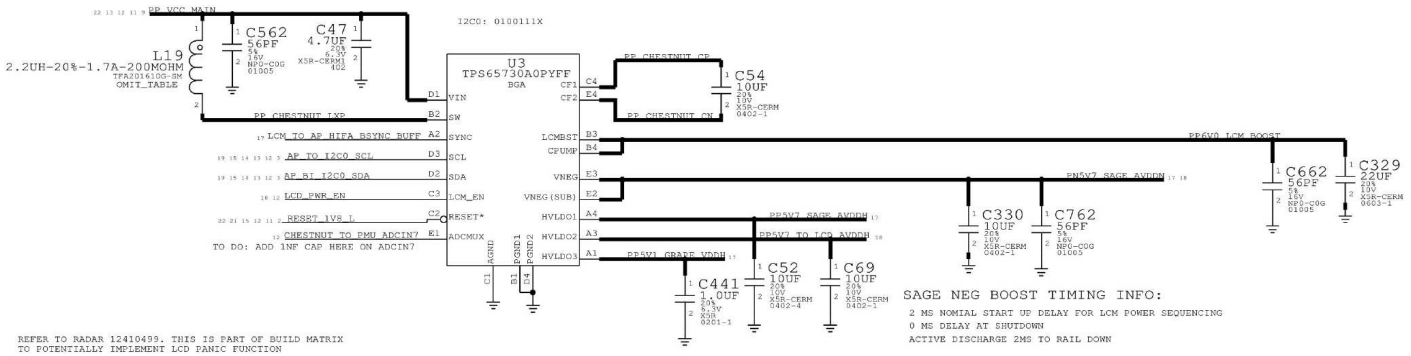

D404 BACKLIGHT DRIVER

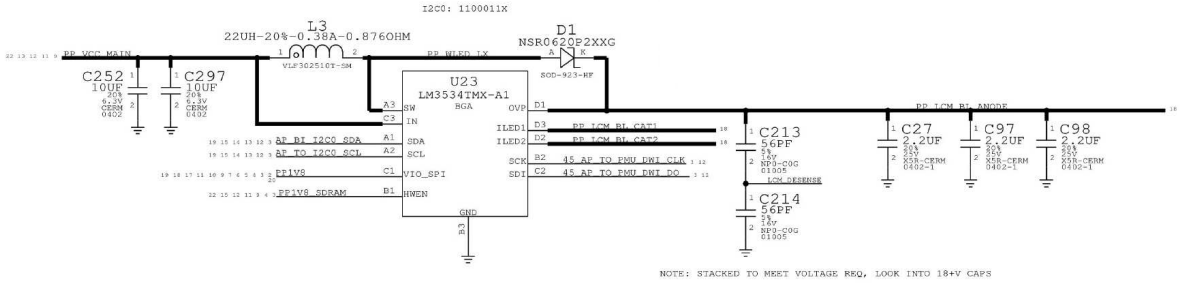

SPEAKER AMP, LED DRIVER

SPEAKER AMP L19

I2C ADDRESS: 1000000X

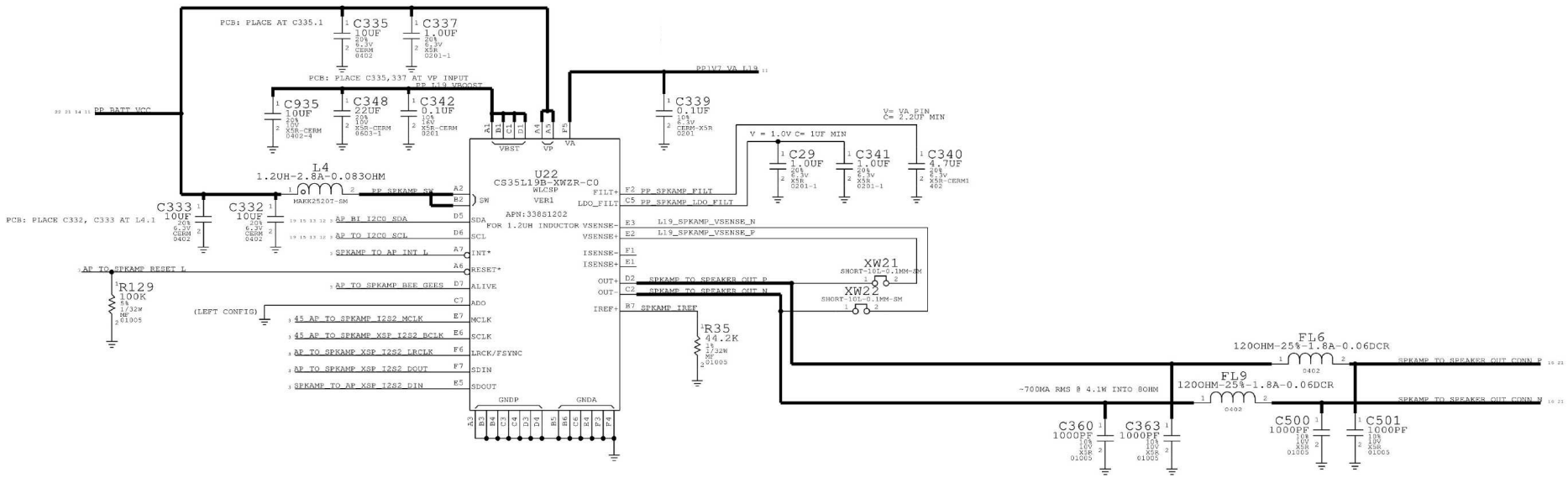

LED DRIVER

I2C ADDRESS: 1100011X

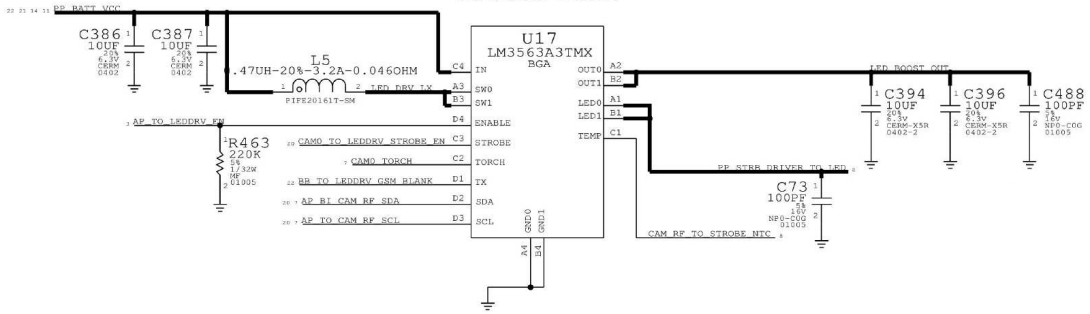

TRISTAR

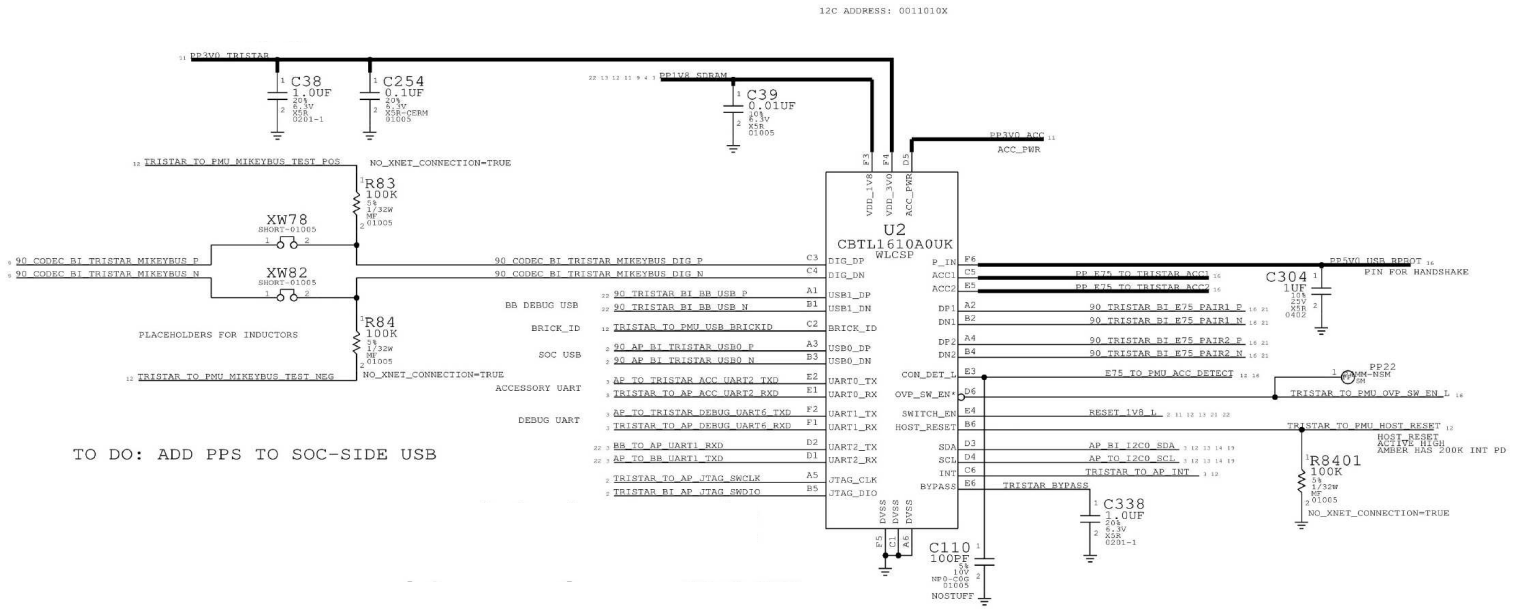
I2C ADDRESS: 0011010X
PP3V0_TRISTAR
C38
1.0UF
20%
6.3V
X5R
0201-1
C254
0.1UF
20%
25V
X5R-CERM
01005
PP1V8_SDRAM
C39
0.01UF
10%
6.3V
X5R
01005
PP3V0_ACC
ACC_PWR
TRISTAR_TO_PMU_MIKEYBUS_TEST_POS
NO_XNET_CONNECTION=TRUE
R83
100K
5%
1/32W
MF
01005
XW78
SHORT-01005
XW82
SHORT-01005
90_CODEC_BI_TRISTAR_MIKEYBUS_P
90_CODEC_BI_TRISTAR_MIKEYBUS_N
90_CODEC_BI_TRISTAR_MIKEYBUS_DIG_P
90_CODEC_BI_TRISTAR_MIKEYBUS_DIG_N
PLACEHOLDERS FOR INDUCTORS
R84
100K
5%
1/32W
MF
01005
TRISTAR_TO_PMU_MIKEYBUS_TEST_NEG
NO_XNET_CONNECTION=TRUE
BB DEBUG USB
90_TRISTAR_BI_BB_USB_P
90_TRISTAR_BI_BB_USB_N
BRICK_ID
TRISTAR_TO_PMU_USB_BRICKID
SOC USB
90_AP_BI_TRISTAR_USB0_P
90_AP_BI_TRISTAR_USB0_N
ACCESSORY UART
AP_TO_TRISTAR_ACC_UART2_TXD
TRISTAR_TO_AP_ACC_UART2_RXD
DEBUG UART
AP_TO_TRISTAR_DEBUG_UART6_TXD
TRISTAR_TO_AP_DEBUG_UART6_RXD
BB_TO_AP_UART1_RXD
AP_TO_BB_UART1_TXD
TRISTAR_TO_AP_JTAG_SWCLK
TRISTAR_BI_AP_JTAG_SWDIO
TO DO: ADD PPS TO SOC-SIDE USB
U2
CBTL1610A0UK
WLCSP
VDD_1V8
VDD_3V0
ACC_PWR
DIG_DP
DIG_DN
USB1_DP
USB1_DN
BRICK_ID
USB0_DP
USB0_DN
UART0_TX
UART0_RX
UART1_TX
UART1_RX
UART2_TX
UART2_RX
JTAG_CLK
JTAG_DIO
DVSS
P_IN
ACC1
ACC2
DP1
DN1
DP2
DN2
CON_DET_L
OVP_SW_EN*
SWITCH_EN
HOST_RESET
SDA
SCL
INT
BYPASS
PP5V0_USB_BRSOT
PIN FOR HANDSHAKE
C304
1UF
10%
25V
X5R
0402
PP_E75_TO_TRISTAR_ACC1
PP_E75_TO_TRISTAR_ACC2
90_TRISTAR_BI_E75_PAIR1_P
90_TRISTAR_BI_E75_PAIR1_N
90_TRISTAR_BI_E75_PAIR2_P
90_TRISTAR_BI_E75_PAIR2_N
E75_TO_PMU_ACC_DETECT
PP22
TRISTAR_TO_PMU_OVP_SW_EN_L
RESET_1V8_L
TRISTAR_TO_PMU_HOST_RESET
HOST_RESET
ACTIVE HIGH
AMBER HAS 200K INT PD
R8401
100K
5%
1/32W
MF
01005
NO_XNET_CONNECTION=TRUE
AP_BI_I2C0_SDA
AP_TO_I2C0_SCL
TRISTAR_TO_AP_INT
TRISTAR_BYPASS
C338
1.0UF
20%
6.3V
X5R
0201-1
C110
100PF
5%
10V
NP0-C0G
01005
NOSTUFF

DOCKFLEX B2B (USB VBUS, MENU BTN, SPEAKER, HP, HP EXTMIC, NAVAJO, ANTENNA PAC/LAT SW CTRL, MIC1 (VOICE MIC), ACC DET/ID/PWR, E75 DIFFPAIRS)

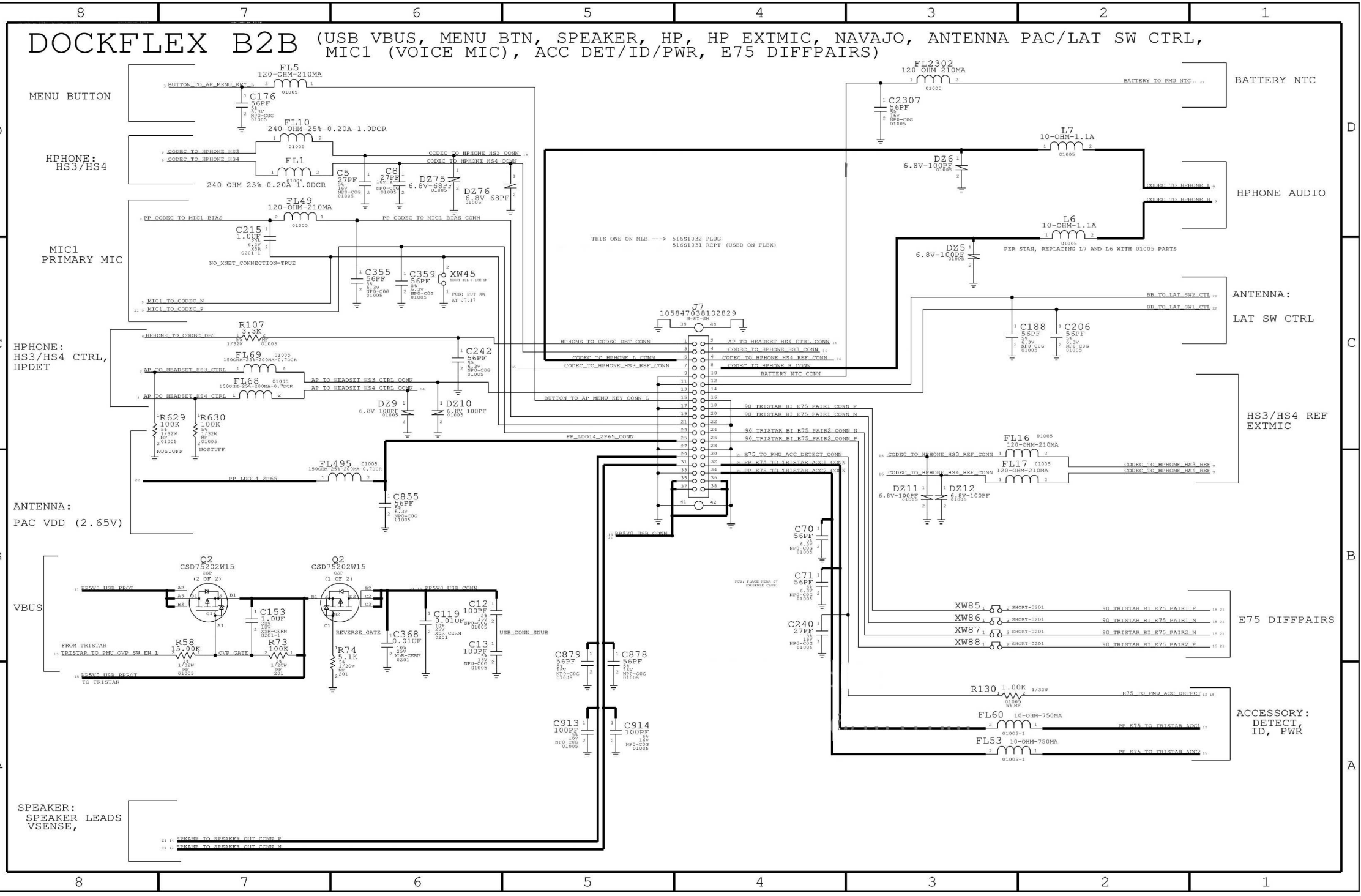

D404 (B2B, DRIVER ICS)

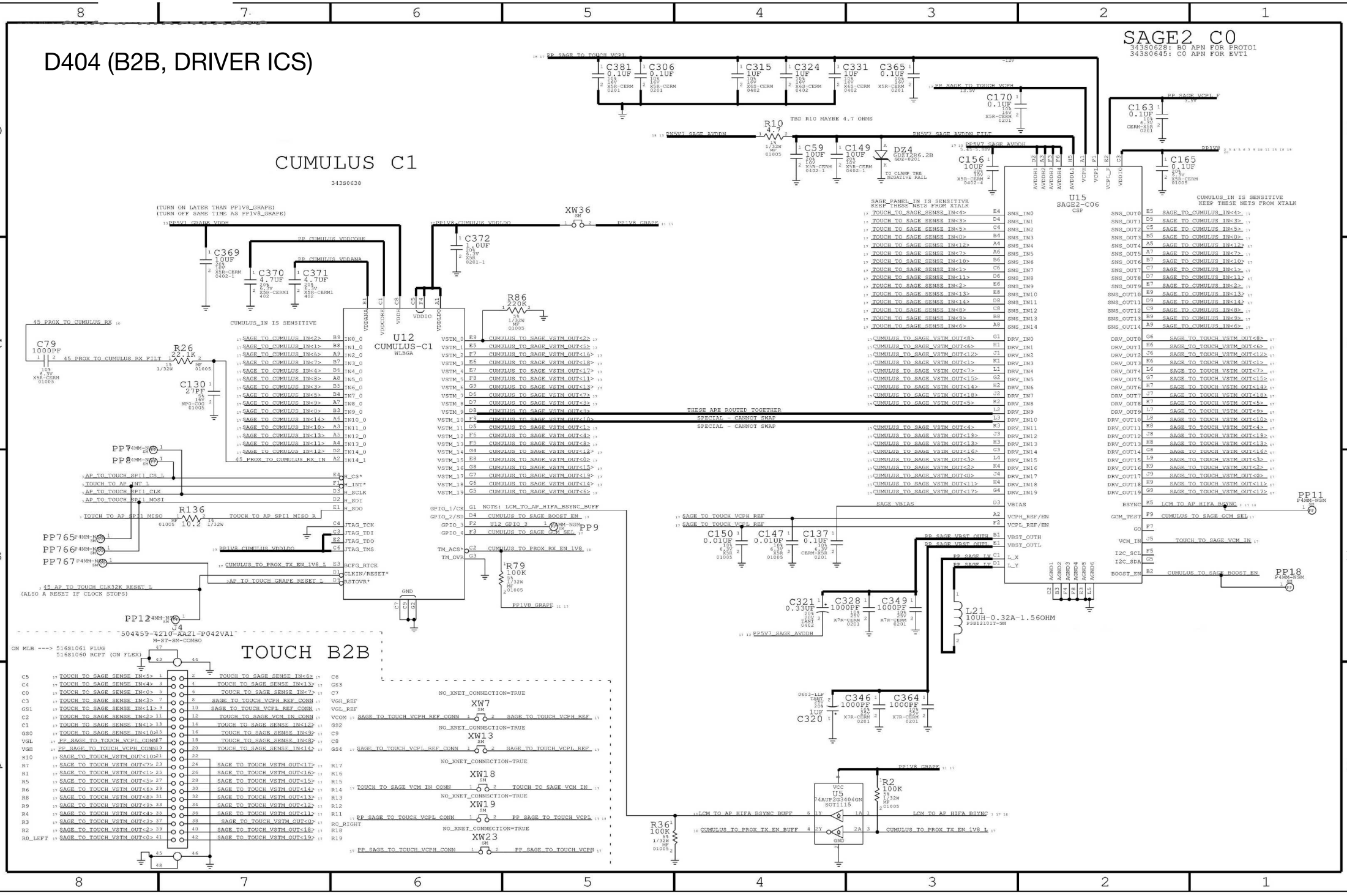

LCM B2B

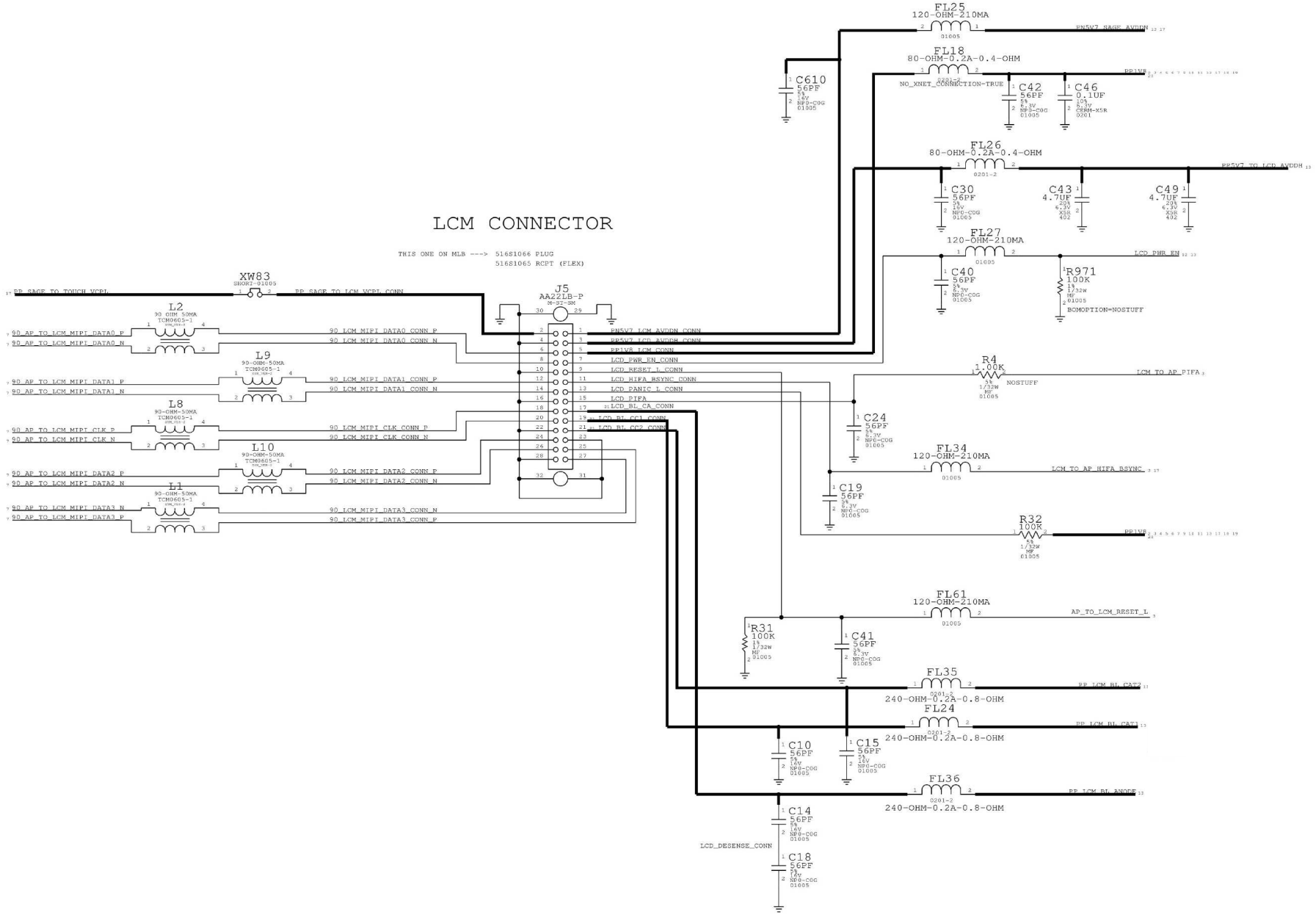
LCM CONNECTOR
THIS ONE ON MLB ---> 516S1066 PLUG
516S1065 RCPT (FLEX)
J5
AA22LB-P
M-ST-SM
XW83
SHORT-01005
PP_SAGE_TO_TOUCH_VCPL
PP_SAGE_TO_LCM_VCPL_CONN
L2
90 OHM 50MA
TCM0605-1
90_AP_TO_LCM_MIPI_DATA0_P
90_AP_TO_LCM_MIPI_DATA0_N
90_LCM_MIPI_DATA0_CONN_P
90_LCM_MIPI_DATA0_CONN_N
L9
90-OHM-50MA
TCM0605-1
90_AP_TO_LCM_MIPI_DATA1_P
90_AP_TO_LCM_MIPI_DATA1_N
90_LCM_MIPI_DATA1_CONN_P
90_LCM_MIPI_DATA1_CONN_N
L8
90-OHM-50MA
TCM0605-1
90_AP_TO_LCM_MIPI_CLK_P
90_AP_TO_LCM_MIPI_CLK_N
90_LCM_MIPI_CLK_CONN_P
90_LCM_MIPI_CLK_CONN_N
L10
90-OHM-50MA
TCM0605-1
90_AP_TO_LCM_MIPI_DATA2_P
90_AP_TO_LCM_MIPI_DATA2_N
90_LCM_MIPI_DATA2_CONN_P
90_LCM_MIPI_DATA2_CONN_N
L1
90-OHM-50MA
TCM0605-1
90_AP_TO_LCM_MIPI_DATA3_N
90_AP_TO_LCM_MIPI_DATA3_P
90_LCM_MIPI_DATA3_CONN_N
90_LCM_MIPI_DATA3_CONN_P
PP5V7_LCM_AVDDN_CONN
PP5V7_LCM_AVDDH_CONN
PP1V8_LCM_CONN
LCD_PWR_EN_CONN
LCD_RESET_L_CONN
LCD_HIFA_BSYNC_CONN
LCD_PANIC_L_CONN
LCD_PIFA
LCD_BL_CA_CONN
LCD_BL_CC1_CONN
LCD_BL_CC2_CONN
FL25
120-OHM-210MA
01005
PP5V7_SAGE_AVDDN
FL18
80-OHM-0.2A-0.4-OHM
0201-2
NO_XNET_CONNECTION=TRUE
PP1V8
C610
56PF
5%
16V
NPO-COG
01005
C42
56PF
5%
6.3V
NPO-COG
01005
C46
0.1UF
10%
6.3V
CERM-X5R
0201
FL26
80-OHM-0.2A-0.4-OHM
0201-2
PP5V7_TO_LCD_AVDDH
C30
56PF
5%
16V
NPO-COG
01005
C43
4.7UF
20%
6.3V
X5R
402
C49
4.7UF
20%
6.3V
X5R
402
FL27
120-OHM-210MA
01005
LCD_PWR_EN
C40
56PF
5%
6.3V
NPO-COG
01005
R971
100K
1%
1/32W
MF
01005
BOMOPTION=NOSTUFF
R4
1.00K
1%
1/32W
MF
01005
NOSTUFF
LCM_TO_AP_PIFA
C24
56PF
5%
6.3V
NPO-COG
01005
FL34
120-OHM-210MA
01005
LCM_TO_AP_HIFA_BSYNC
C19
56PF
5%
6.3V
NPO-COG
01005
R32
100K
5%
1/32W
MF
01005
PP1V8
FL61
120-OHM-210MA
01005
AP_TO_LCM_RESET_L
R31
100K
1%
1/32W
MF
01005
C41
56PF
5%
6.3V
NPO-COG
01005
FL35
0201-2
240-OHM-0.2A-0.8-OHM
PP_LCM_BL_CAT2
FL24
0201-2
240-OHM-0.2A-0.8-OHM
PP_LCM_BL_CAT1
C10
56PF
5%
16V
NPO-COG
01005
C15
56PF
5%
16V
NPO-COG
01005
FL36
0201-2
240-OHM-0.2A-0.8-OHM
PP_LCM_BL_ANODE
C14
56PF
5%
16V
NPO-COG
01005
LCD_DESENSE_CONN
C18
56PF
5%
16V
NPO-COG
01005

SENSORS

THIS PART OUTSIDE OF SHIELD

COMPASS

COMPASS DEVICE: 338S1014
COMPASS INTERPOSER: 998-5120

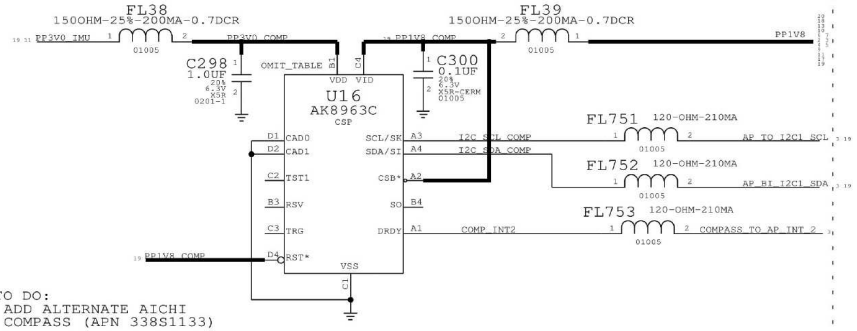

TO DO:
ADD ALTERNATE AICHI
COMPASS (APN 338S1133)

THESE PARTS INSIDE OF SHIELD

GYRO

AP3GDL20HAB, APN 338S1192

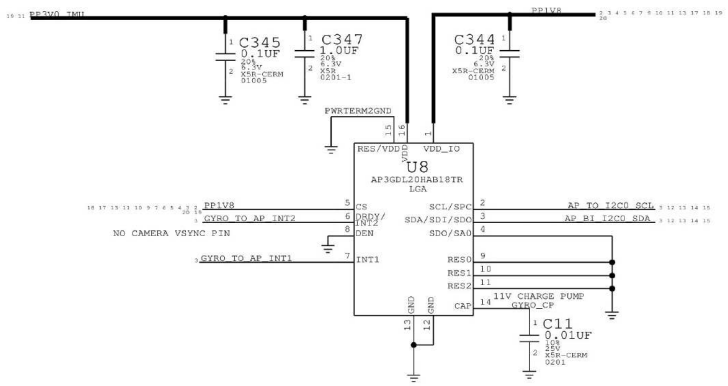

ACCELEROMETER

AP2DHAB, APN 338S1191

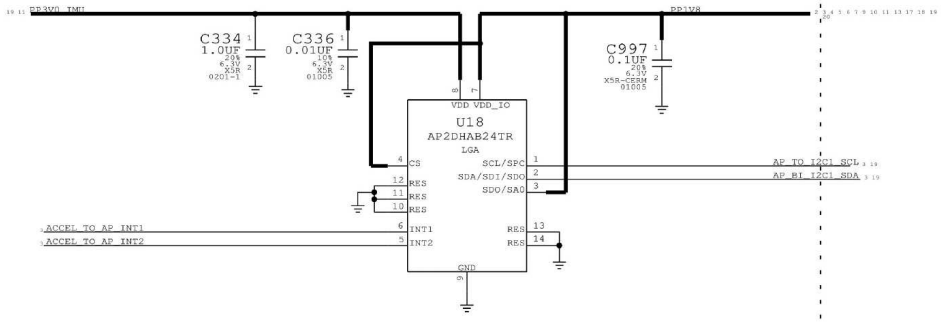

TO DO: VERIFY CONNECTIONS ON ACCEL (CS, SDO PINS)

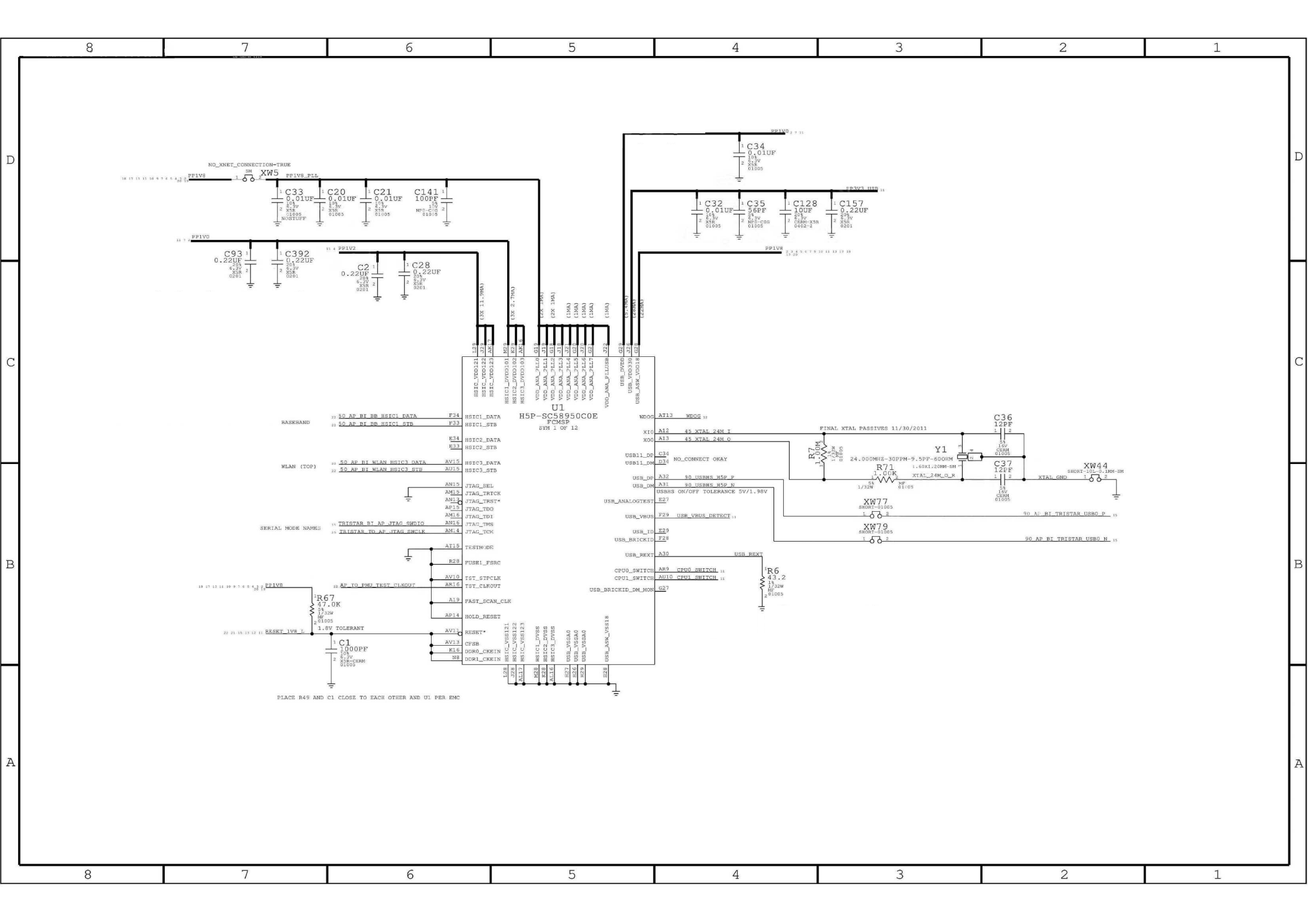
NO_XNET_CONNECTION=TRUE
PP1V8
XW5
PP1V8_PLL
C33 0.01UF
C20 0.01UF
C21 0.01UF
C141 100PF
C93 0.22UF
C392 0.22UF
C2 0.22UF
C28 0.22UF
PP1V0
PP1V2
C34 0.01UF
PP3V3_USB
C32 0.01UF
C35 56PF
C128 10UF
C157 0.22UF
U1
H5P-SC58950C0E
FCMSP
SYM 1 OF 12
BASEBAND
50_AP_BI_BB_HSIC1_DATA
50_AP_BI_BB_HSIC1_STB
HSIC1_DATA
HSIC1_STB
HSIC2_DATA
HSIC2_STB
WLAN (TOP)
50_AP_BI_WLAN_HSIC3_DATA
50_AP_BI_WLAN_HSIC3_STB
HSIC3_DATA
HSIC3_STB
JTAG_SEL
JTAG_TRTCK
JTAG_TRST*
JTAG_TDO
JTAG_TDI
JTAG_TMS
JTAG_TCK
SERIAL MODE NAMES
TRISTAR_BI_AP_JTAG_SWDIO
TRISTAR_TO_AP_JTAG_SWCLK
TESTMODE
FUSE1_FSRC
TST_STPCLK
TST_CLKOUT
AP_TO_PMU_TEST_CLKOUT
FAST_SCAN_CLK
HOLD_RESET
RESET*
CFSB
DDR0_CKEIN
DDR1_CKEIN
R67 47.0K
1.8V TOLERANT
RESET_1V8_L
C1 1000PF
PLACE R49 AND C1 CLOSE TO EACH OTHER AND U1 PER EMC
WDOG
XI0
XO0
45_XTAL_24M_I
45_XTAL_24M_O
USB11_DP
USB11_DM
NO_CONNECT OKAY
USB_DP
USB_DM
90_USBHS_H5P_P
90_USBHS_H5P_N
USBHS ON/OFF TOLERANCE 5V/1.98V
USB_ANALOGTEST
USB_VBUS
USB_VBUS_DETECT
USB_ID
USB_BRICKID
USB_REXT
CPU0_SWITCH
CPU1_SWITCH
USB_BRICKID_DM_MON
R6 43.2
FINAL XTAL PASSIVES 11/30/2011
R7 1.00M
Y1
24.000MHZ-30PPM-9.5PF-600HM
R71 1.00K
C36 12PF
C37 12PF
XTAL_GND
XW44
XW77
XW79
90_AP_BI_TRISTAR_USB0_P
90_AP_BI_TRISTAR_USB0_N

CAM0: MAIN CAMERA CONNECTOR

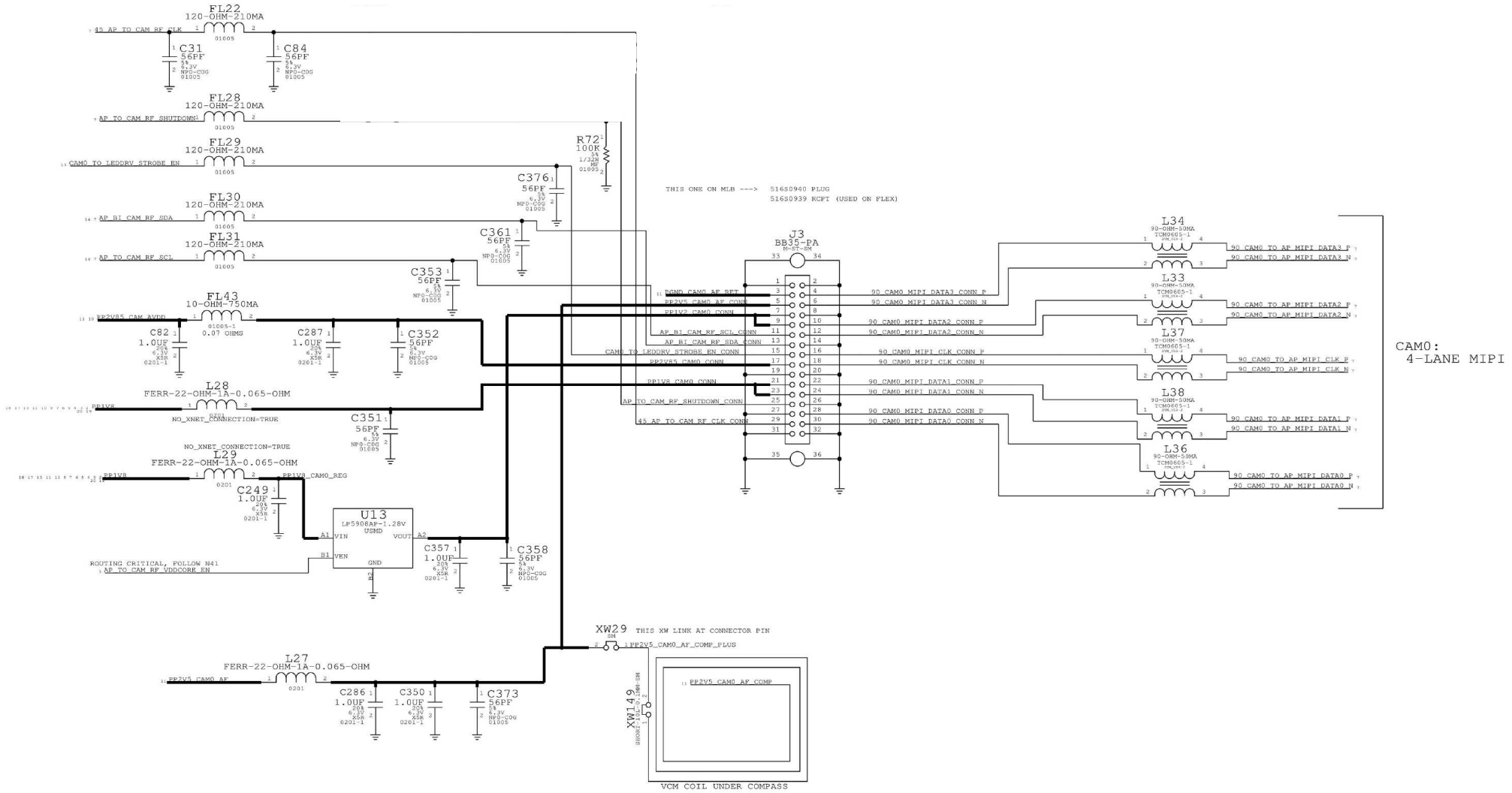

BATT CONN, TPS, STANDOFFS/SHIELDS/FIDUCIALS

BATTERY CONN

THIS ONE ON MLB ---> 516S1068 RCPT
516S1076 PLUG (USED ON BATTERY PCM)

J6
RCPT-BATT-0.80
F-ST-SM

FL11
120-OHM-210MA
01005

C279
56PF
5%
16V
NP0-C0G
01005

AP_BI_BATTERY_SWI

AP_BI_BATTERY_SWI_CONN

PP_BATT_VCC

C23
56PF
5%
16V
NP0-C0G
01005

C25
56PF
5%
16V
NP0-C0G
01005

XW12
SM-SZ3P-0.7DL-2R0SE

C9
56PF
5%
16V
NP0-C0G
01005

C275
220PF
10%
10V
X7R-CERM
01005

C22
56PF
5%
16V
NP0-C0G
01005

PCB: PLACE XW12 AT BATT CONN, PIN 7
BATTERY_TO_PMU_SENSE

FIDUCIALS

FD1
FID
OPSSMIPOSQ-NSP

FD2
FID
OPSSMIPOSQ-NSP

FD3
FID
OPSSMIPOSQ-NSP

FD4
FID
OPSSMIPOSQ-NSP

FD5
FID
OPSSMIPOSQ-NSP

FD6
FID
OPSSMIPOSQ-NSP

COWLING UPPER LEFT

CL1
CLIP-SM
SPRING-SUPER-COWLING-GROUND-X145

SHIELDS

SH1
SM
806-4834
SHLD-EMI-UPPER-FRONT

SH2
SM
806-4228
SHLD-X145-EMI-LOWER-FRONT

SH3
SM
806-4832
SHLD-EMI-UPPER-BACK

SH4
SM
806-4230
SHLD-X145-EMI-LOWER-BACK

AC COUPLED SCREW HOLES + STANDOFFS

(ON NORTH END OF SINGLE_BRD, TO MITIGATE COMPASS RETURN CURRENTS)

SCREW HOLES

PGND_SCREW_HOLE1

C427
100PF
5%
16V
NP0-C0G
01005

C430
56PF
5%
16V
NP0-C0G
01005

C432
27PF
5%
16V
NP0-C0G
01005

STANDOFFS

BS1
STDOFF-2.7OD1.4ID-1.04H-SM-1
860-1511

PGND_STANDOFF1

C433
100PF
5%
16V
NP0-C0G
01005

C435
56PF
5%
16V
NP0-C0G
01005

C437
27PF
5%
16V
NP0-C0G
01005

BS2
STDOFF-2.7OD1.4ID-1.04H-SM-1
860-1511

PGND_STANDOFF2

C434
100PF
5%
16V
NP0-C0G
01005

C436
56PF
5%
16V
NP0-C0G
01005

C438
27PF
5%
16V
NP0-C0G
01005

TESTPOINTS

POWER TP

PP5V0_USB_CONN — TP1 (TP-P6) — VBUS

TP2 (TP-P6) — POWER GROUND

PP_BATT_VCC — TP3 (TP-P80) — VBATT

TP11 (TP-P6) — VBATT GROUND

TP34 (TP-P90) — POWER GROUND

PP_BATT_VCC — TP4 (TP-P55) — VBATT

PP_BATT_VCC — TP40 (TP-P55) — VBATT

PP_BATT_VCC — TP50 (TP-P55) — VBATT

BATTERY_TO_PMU_NTC — TP5 (TP-P6) — BATTERY NTC

SUPER TP

PMU_AMUX_AY — TP6 (TP-P6) — ANALOG MUX A OUTPUT

PMU_AMUX_BY — TP7 (TP-P6) — ANALOG MUX B OUTPUT

RESET

RESET_1V8_L — TP8 (TP-P6) — H6P & BB RESET

DFU

FORCE_DFU — TP9 (TP-P6) — FORCE DFU

LCM BACKLIGHT

LCD_BL_CC2_CONN — TP18 (TP-P6) — LCD BACKLIGHT SINK1

LCD_BL_CC1_CONN — TP19 (TP-P6) — LCD BACKLIGHT SINK2

LCD_BL_CA_CONN — TP20 (TP-P6) — LCD BACKLIGHT SOURCE

SPKAMP OUTPUT TP

SPKAMP_TO_SPEAKER_OUT_CONN_P — TP91 (TP-P6)

SPKAMP_TO_SPEAKER_OUT_CONN_N — TP92 (TP-P6)

E75 - USB/UART/ID/POWER

90_TRISTAR_BI_E75_PAIR1_P — TP21 (TP-P6)

90_TRISTAR_BI_E75_PAIR1_N — TP22 (TP-P6)

90_TRISTAR_BI_E75_PAIR2_P — TP23 (TP-P6)

90_TRISTAR_BI_E75_PAIR2_N — TP24 (TP-P6)

PP_E75_TO_TRISTAR_ACC1_CONN — TP26 (TP-P6)

PP_E75_TO_TRISTAR_ACC2_CONN — TP27 (TP-P6)

ACCESSORY ID AND POWER

TP25 (TP-P6) — POWER GROUND

TP32 (TP-P6) — POWER GROUND

E75_TO_PMU_ACC_DETECT_CONN — TP10 (TP-P6) — FOR DIAGS

MIC AUDIO

MIC1_TO_CODEC_P — TP15 (TP-P6) — MIC1 POSITIVE

MIC2_TO_CODEC_P — TP16 (TP-P6) — MIC2 POSITIVE

MIC3_TO_CODEC_CONN_P — TP17 (TP-P6) — MIC3 POSITIVE

DRIVE MIC WRT NEAREST GROUND TEST POINT

CODEC_TO_RCVR_TP_P — TP65 (TP-P6) — RCVR POSITIVE

CODEC_TO_RCVR_TP_N — TP66 (TP-P6) — RCVR NEGATIVE

RADIO_MLB HIERARCHICAL SYMBOL

AP/RADIO INTERFACE

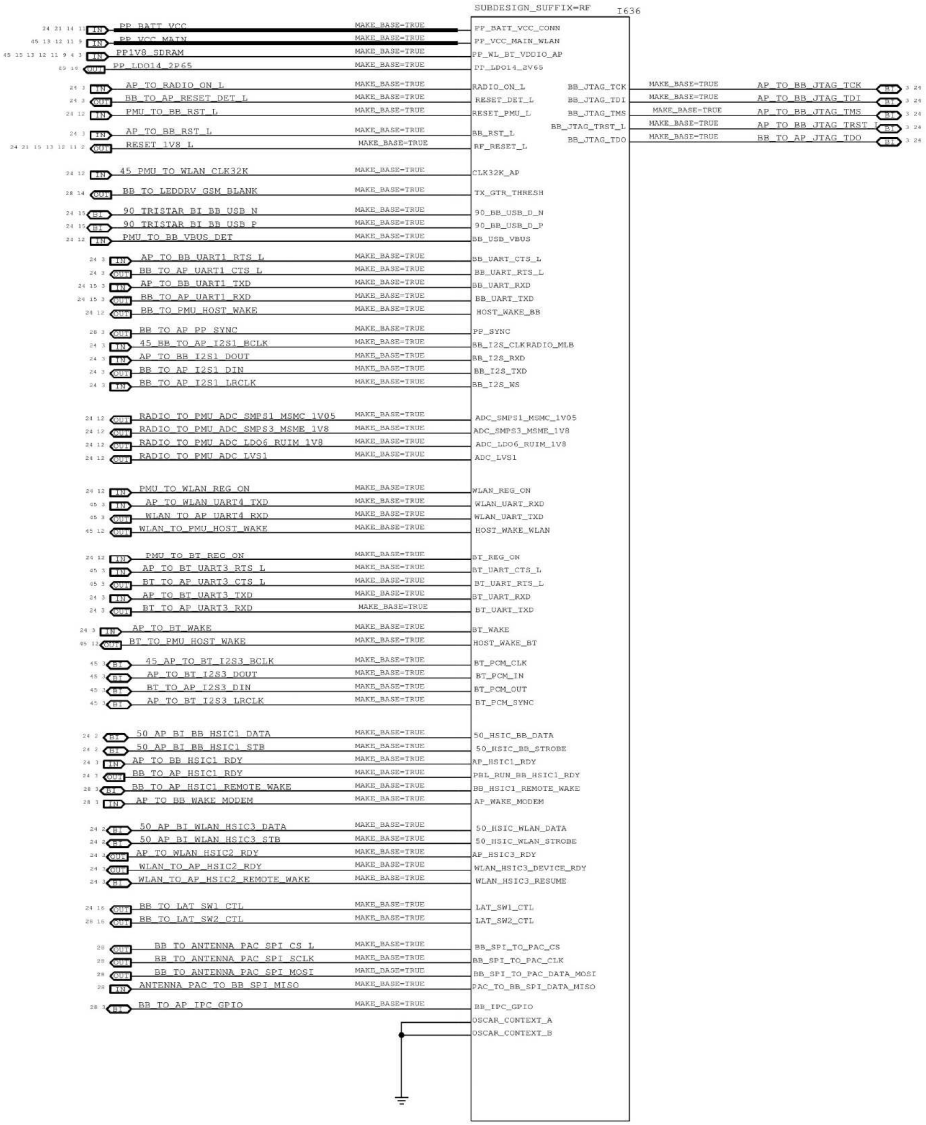

PDF PAGE	CSA PAGE	CONTENTS
2	2	AP INTERFACE & DEBUG CONNECTORS
3	3	PMU (1 0F 2)
4	4	PMU (2 OF 2)
5	5	BASEBAND (1 OF 2)
6	6	BASEBAND (2 OF 2)
7	7	RF TRANSCEIVER (1 0F 2)
8	8	RF TRANSCEIVER (2 OF 2)
9	9	RX MATCHING
10	10	TX INTERSTAGE FILTERS
11	11	BAND 1/34/39/38/40 TX
12	12	BAND 2/3 PAD
13	13	BAND 7/20 PAD
14	14	BAND 5/8 PAD
15	15	2G PA
16	16	PA DCDC CONVERTER
17	17	PRIMARY ASM
18	18	RX DIVERSITY
19	19	GPS
20	20	ANTENNA FEEDS
21	21	SWITCH LOGIC
22	22	BLANK
23	23	WIFI/BT

SCH :951-3301
BOM :639-4501
BOARD :820-3581

AP INTERFACE & DEBUG CONNECTORS

AP CONNECTIONS

IN = FROM AP
OUT = TO AP

16 15 14 13 12 11 3	PP_BATT_VCC_CONN	OUT	
2	PP_VCC_MAIN_WLAN	OUT	
4	TX_GTR_THRESH	OUT	
6 2	BB_RST_L	IN	
6	RESET_DET_L	OUT	
4 2	RADIO_ON_L	IN	
4	RESET_PMU_L	OUT	
6 2	HOST_WAKE_BB	OUT	
9	RF_RESET_L	OUT	
6 2	PBL_RUN_BB_HSIC1_RDY	OUT	
23 2	WLAN_HSIC3_RESUME	OUT	
9	AP_WAKE_MODEM	OUT	
6 2	AP_HSIC1_RDY	IN	
5 2	S0_HSIC_BB_DATA	BIDI	
5 2	S0_HSIC_BB_STROBE	BIDI	
9	BB_HSIC1_REMOTE_WAKE	OUT	
6 2	BB_UART_TXD	OUT	
6 2	BB_UART_RXD	IN	
6 2	BB_UART_RTS_L	OUT	
6 2	BB_UART_CTS_L	IN	
3 2	BB_USB_VBUS	IN	
5 2	S0_BB_USB_D_P	BIDI	
5 2	S0_BB_USB_D_N	BIDI	
6 2	BB_I2S_CLK	IN	
6 2	BB_I2S_WS	IN	
6 2	BB_I2S_TXD	OUT	
6 2	BB_I2S_RXD	IN	
9	PP_SYNC	OUT	
29	PP_WL_BT_VDDIO_AP	IN	
23 2	CLK32K_AP	IN	
23 2	WLAN_REG_ON	IN	
2	WLAN_UART_TXD	OUT	
2	WLAN_UART_RXD	IN	
2	HOST_WAKE_WLAN	OUT	
23 2	WLAN_HSIC3_DEVICE_RDY	OUT	
23 2	AP_HSIC3_RDY	IN	
23 2	S0_HSIC_WLAN_DATA	BIDI	
23 2	S0_HSIC_WLAN_STROBE	BIDI	
27	HOST_WAKE_BT	OUT	
23 2	BT_WAKE	IN	
23 2	BT_UART_TXD	OUT	
23 2	BT_UART_RXD	IN	
23	BT_UART_RTS_L	OUT	
23	BT_UART_CTS_L	IN	
23 2	BT_REG_ON	IN	
29	BT_PCM_CLK	BIDI	
29	BT_PCM_SYNC	BIDI	
29	BT_PCM_OUT	BIDI	
29	BT_PCM_IN	BIDI	
6 2	LAT_SW1_CTL	OUT	
9	LAT_SW2_CTL	OUT	
20 2	BB_SPI_TO_PAC_CS	OUT	
20 2	BB_SPI_TO_PAC_DATA_MOSI	OUT	
20 2	BB_SPI_TO_PAC_CLK	OUT	
20 2	PAC_TO_BB_SPI_DATA_MISO	IN	
20 18 17 11 10 2	PP_LDO14_2V65	OUT	
5 2	BB_JTAG_TCK	IN	
5 2	BB_JTAG_TDI	IN	
5 2	BB_JTAG_TMS	IN	
5 2	BB_JTAG_TRST_L	IN	
5 2	BB_JTAG_TDO	OUT	
9	ADC_SMPS1_MSMC_1V05	OUT	
9	ADC_SMPS3_MSME_1V8	OUT	
9	ADC_LDO6_RUIM_1V8	OUT	
9	ADC_1V85	OUT	
9	BB_IPC_GPIO	OUT	
23 2	OSCAR_CONTEXT_A	IN	
23 2	OSCAR_CONTEXT_B	IN	

PROBE POINTS

PP1_RF	P4MM-NSM	1 BB_ERROR_FLAG	6
PP2_RF	P4MM-NSM	1 SLEEP_CLK_32K	4 5
PP3_RF	P4MM-NSM	1 PMIC_SSBI	4 5
PP11_RF	P4MM-NSM	1 CLK32K_AP	2 23
PP14_RF	P4MM-NSM	1 AP_HSIC3_RDY	2 23
PP15_RF	P4MM-NSM	1 WLAN_HSIC3_DEVICE_RDY	2 23
PP18_RF	P4MM-NSM	1 WLAN_HSIC3_RESUME	2 23
PP19_RF	P4MM-NSM	1 WTR_SSBI_TX_GPS	6 7
PP20_RF	P4MM-NSM	1 WTR_SSBI_PRX_DRX	6 7
PP21_RF	P4MM-NSM	1 WTR_RX_ON	6 7
PP22_RF	P4MM-NSM	1 WTR_RF_ON	6 7
PP40_RF	P4MM-NSM	1 WLAN_COEX_TXD	23
PP41_RF	P4MM-NSM	1 LTE_COEX_TXD	6 23
PP42_RF	P4MM-NSM	1 S0_HSIC_BB_STROBE	2 5
PP43_RF	P4MM-NSM	1 S0_HSIC_BB_DATA	2 5
PP44_RF	P4MM-NSM	1 S0_HSIC_WLAN_STROBE	2 23
PP45_RF	P4MM-NSM	1 S0_HSIC_WLAN_DATA	2 23
PP46_RF	P4MM-NSM	1 BT_UART_TXD	2 23
PP47_RF	P4MM-NSM	1 BT_UART_RXD	2 23
PP4_RF	P4MM-NSM	1 BB_I2S_CLK	2 6
PP5_RF	P4MM-NSM	1 BB_I2S_WS	2 6
PP6_RF	P4MM-NSM	1 BB_I2S_RXD	2 6
PP7_RF	P4MM-NSM	1 BB_I2S_TXD	2 6
PP10_RF	P4MM-NSM	1 SPI_DATA_MOSI	6
PP12_RF	P4MM-NSM	1 SPI_CLK	6
PP13_RF	P4MM-NSM	1 SPI_CS_L	6
PP16_RF	P4MM-NSM	1 SPI_DATA_MISO	6

PROBE POINTS NEAR AP

PP60_RF	P4MM-NSM	1 S0_HSIC_BB_STROBE	2 5
PP61_RF	P4MM-NSM	1 S0_HSIC_BB_DATA	2 5

DEBUG CONNECTOR

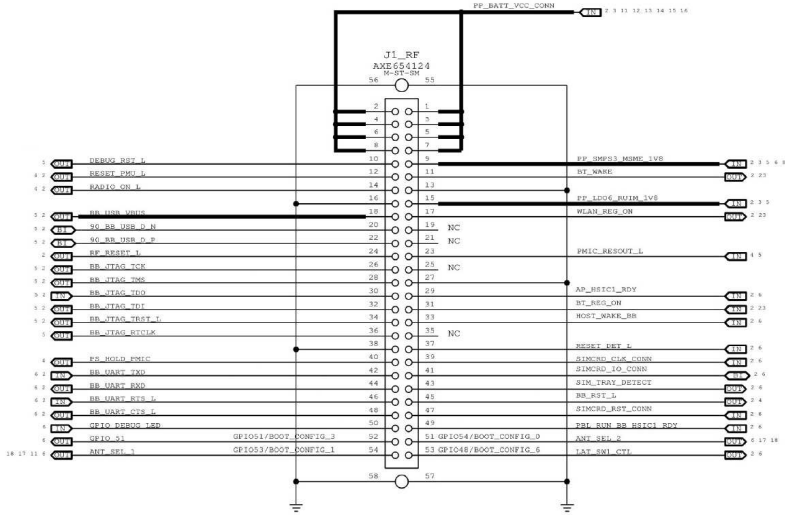

BOOT OPTIONS	BOOT_CONFIG SW REGISTER VALUE	GPIO/BOOT_CONFIG CONFIGURATION							
		6	5	4	3	2	1	0	
		47	48	49	50	51	52	53	54	55
BOOT_DEFAULT_OPTION	0X00	X	0	0	0	0	0	0	0	X
BOOT_MANDL_OPTION	0X01	X	1	0	0	0	0	0	1	X
BOOT_HSIC_OPTION	0X02	X	1	0	0	0	0	1	0	X
BOOT_USB_OPTION	0X03	X	1	0	0	0	0	1	1	X
ENABLE SAHARA PROTOCOL	0X08	X	1	0	0	1	0	X	X	X

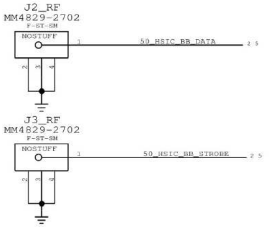

SIM CARD CONNECTOR

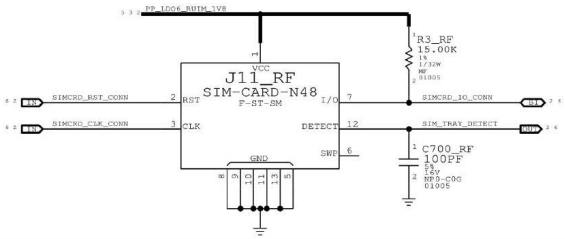

SIM CARD ESD PROTECTION

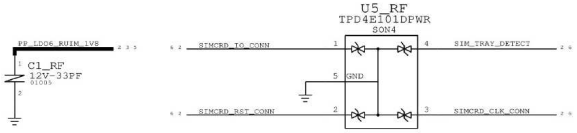

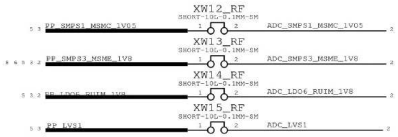

PMU (1 OF 2)

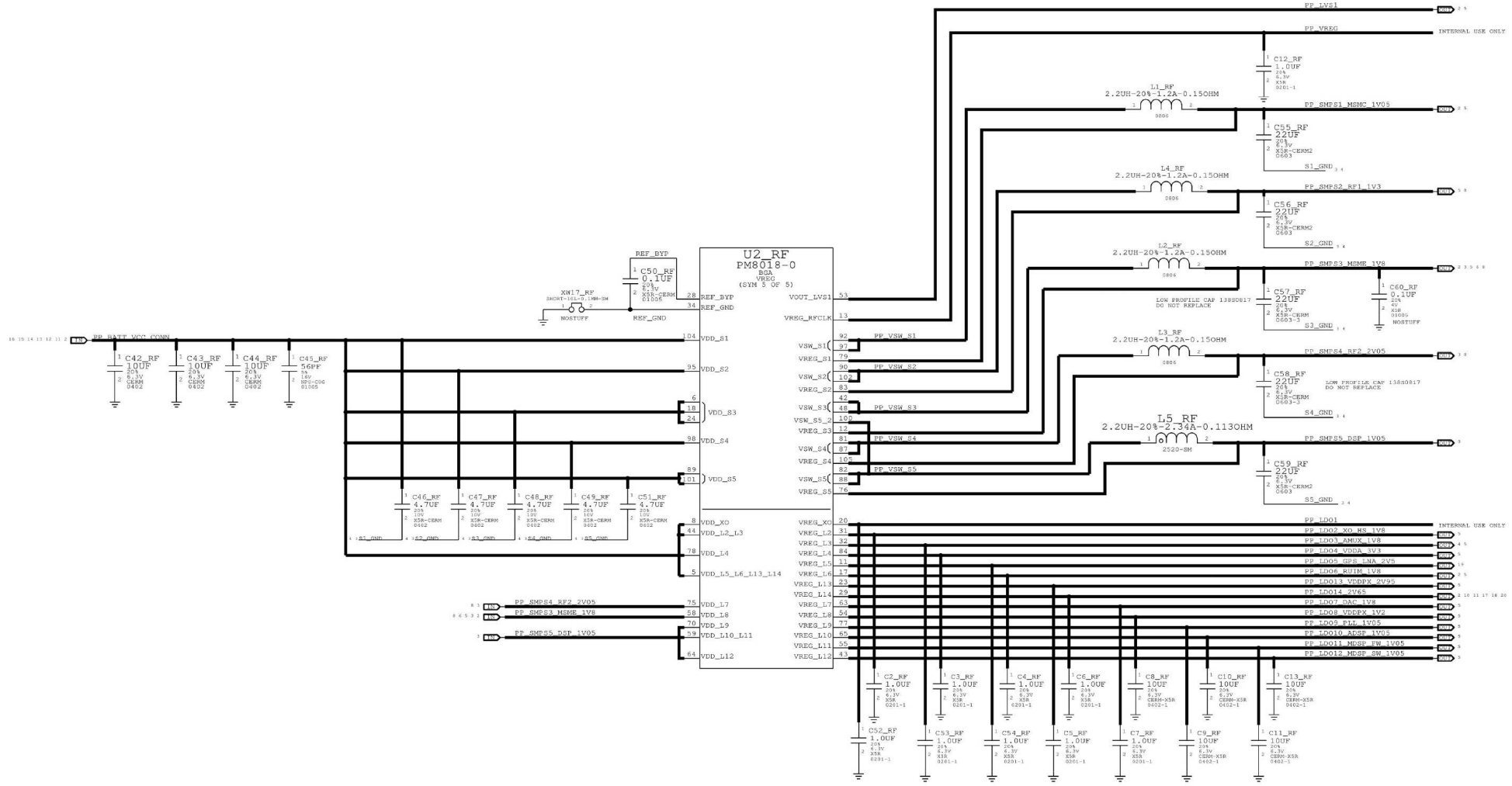
U2_RF
PM8018-0
BGA
VREG
(SYM 5 OF 5)
PP_BATT_VCC_CONN
C42_RF 10UF 20% 6.3V CERM 0402
C43_RF 10UF 20% 6.3V CERM 0402
C44_RF 10UF 20% 6.3V CERM 0402
C45_RF 56PF 5% 16V NPO-C0G 0100
C46_RF 4.7UF 20% 10V X5R-CERM 0402
C47_RF 4.7UF 20% 10V X5R-CERM 0402
C48_RF 4.7UF 20% 10V X5R-CERM 0402
C49_RF 4.7UF 20% 10V X5R-CERM 0402
C51_RF 4.7UF 20% 10V X5R-CERM 0402
S1_GND
S2_GND
S3_GND
S4_GND
S5_GND
REF_BYP
C50_RF 0.1UF 20% 6.3V X5R-CERM 0100S
XW17_RF SHORT-16L-0.1MM-SM
NOSTUFF
REF_GND
VDD_S1
VDD_S2
VDD_S3
VDD_S4
VDD_S5
VDD_XO
VDD_L2_L3
VDD_L4
VDD_L5_L6_L13_L14
VDD_L7
VDD_L8
VDD_L9
VDD_L10_L11
VDD_L12
PP_SMPS4_RF2_2V05
PP_SMPS3_MSME_1V8
PP_SMPS5_DSP_1V05
VOUT_LVS1
VREG_RFCLK
VSW_S1
VREG_S1
VSW_S2
VREG_S2
VSW_S3
VSW_S5_2
VREG_S3
VSW_S4
VREG_S4
VSW_S5
VREG_S5
VREG_XO
VREG_L2
VREG_L3
VREG_L4
VREG_L5
VREG_L6
VREG_L13
VREG_L14
VREG_L7
VREG_L8
VREG_L9
VREG_L10
VREG_L11
VREG_L12
PP_VSW_S1
PP_VSW_S2
PP_VSW_S3
PP_VSW_S4
PP_VSW_S5
PP_LVS1
PP_VREG
INTERNAL USE ONLY
C12_RF 1.0UF 20% 6.3V X5R 0201-1
L1_RF 2.2UH-20%-1.2A-0.150HM 0806
PP_SMPS1_MSMC_1V05
C55_RF 22UF 20% 6.3V X5R-CERM2 0603
S1_GND
L4_RF 2.2UH-20%-1.2A-0.150HM 0806
PP_SMPS2_RF1_1V3
C56_RF 22UF 20% 6.3V X5R-CERM2 0603
S2_GND
L2_RF 2.2UH-20%-1.2A-0.150HM 0806
PP_SMPS3_MSME_1V8
C57_RF 22UF 20% 6.3V X5R-CERM 0603-3
LOW PROFILE CAP 13880817 DO NOT REPLACE
S3_GND
C60_RF 0.1UF 20% 4V X5R 0100S
NOSTUFF
L3_RF 2.2UH-20%-1.2A-0.150HM 0806
PP_SMPS4_RF2_2V05
C58_RF 22UF 20% 6.3V X5R-CERM 0603-3
LOW PROFILE CAP 13880817 DO NOT REPLACE
S4_GND
L5_RF 2.2UH-20%-2.34A-0.113OHM 2520-SM
PP_SMPS5_DSP_1V05
C59_RF 22UF 20% 6.3V X5R-CERM2 0603
S5_GND
PP_LD01
PP_LD02_XO_MS_1V8
PP_LD03_AMUX_1V8
PP_LD04_VDDA_3V3
PP_LD05_GPS_LNA_2V5
PP_LD06_RUIM_1V8
PP_LD013_VDDPX_2V95
PP_LD014_2V65
PP_LD07_DAC_1V8
PP_LD08_VDDPX_1V2
PP_LD09_PLL_1V05
PP_LD010_ADSP_1V05
PP_LD011_MDSP_FW_1V05
PP_LD012_MDSP_SW_1V05
C2_RF 1.0UF 20% 6.3V X5R 0201-1
C3_RF 1.0UF 20% 6.3V X5R 0201-1
C4_RF 1.0UF 20% 6.3V X5R 0201-1
C6_RF 1.0UF 20% 6.3V X5R 0201-1
C8_RF 10UF 20% 6.3V CERM-X5R 0402-1
C10_RF 10UF 20% 6.3V CERM-X5R 0402-1
C13_RF 10UF 20% 6.3V CERM-X5R 0402-1
C52_RF 1.0UF 20% 6.3V X5R 0201-1
C53_RF 1.0UF 20% 6.3V X5R 0201-1
C54_RF 1.0UF 20% 6.3V X5R 0201-1
C5_RF 1.0UF 20% 6.3V X5R 0201-1
C7_RF 1.0UF 20% 6.3V X5R 0201-1
C9_RF 10UF 20% 6.3V CERM-X5R 0402-1
C11_RF 10UF 20% 6.3V CERM-X5R 0402-1

PMU (2 OF 2)

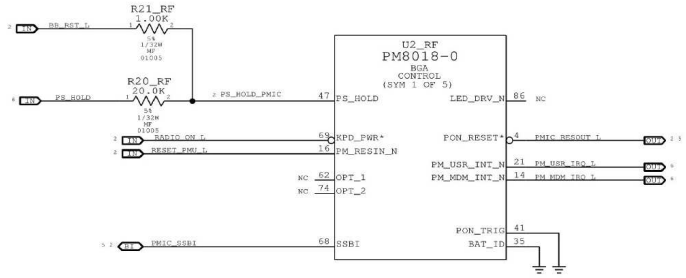

PA_ID	CONFIG
1.1V	MAV7 APAC
1.3V	MAV7 EU
1.5V	MAV7.3 APAC
1.7V	MAV7.3 EU

BOARD_ID	REVISION
0.1V	UNUSED
0.3V	UNUSED
0.5V	UNUSED
0.7V	PROTO1
0.9V	PROTO2
1.1V	EVT1
1.3V	E1C
1.5V	EVT2
1.7V	DVT/PVT

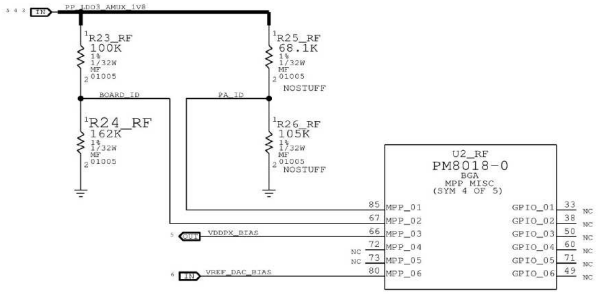

AP SECTION NEEDS ITS OWN THERMISTOR PLACED NEAR THE PA'S.

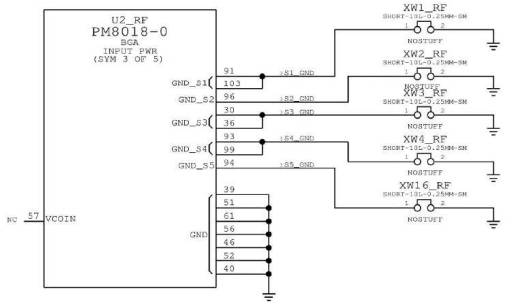

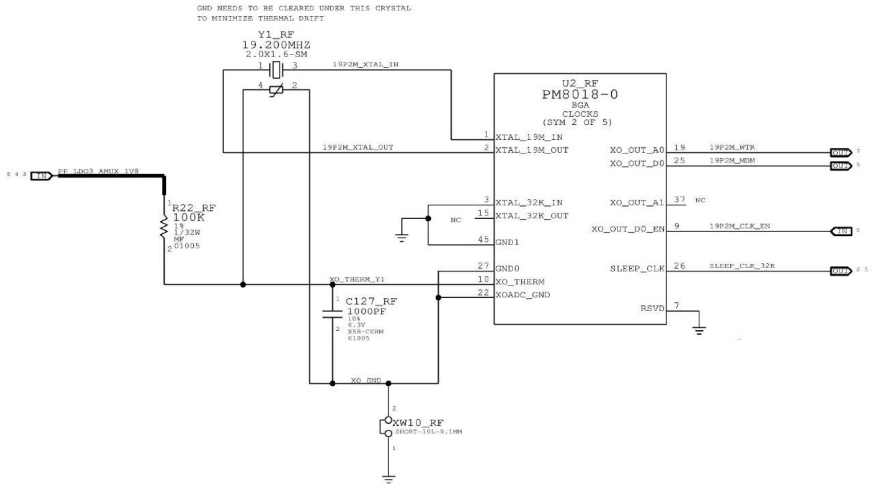

BASEBAND (1 OF 2)

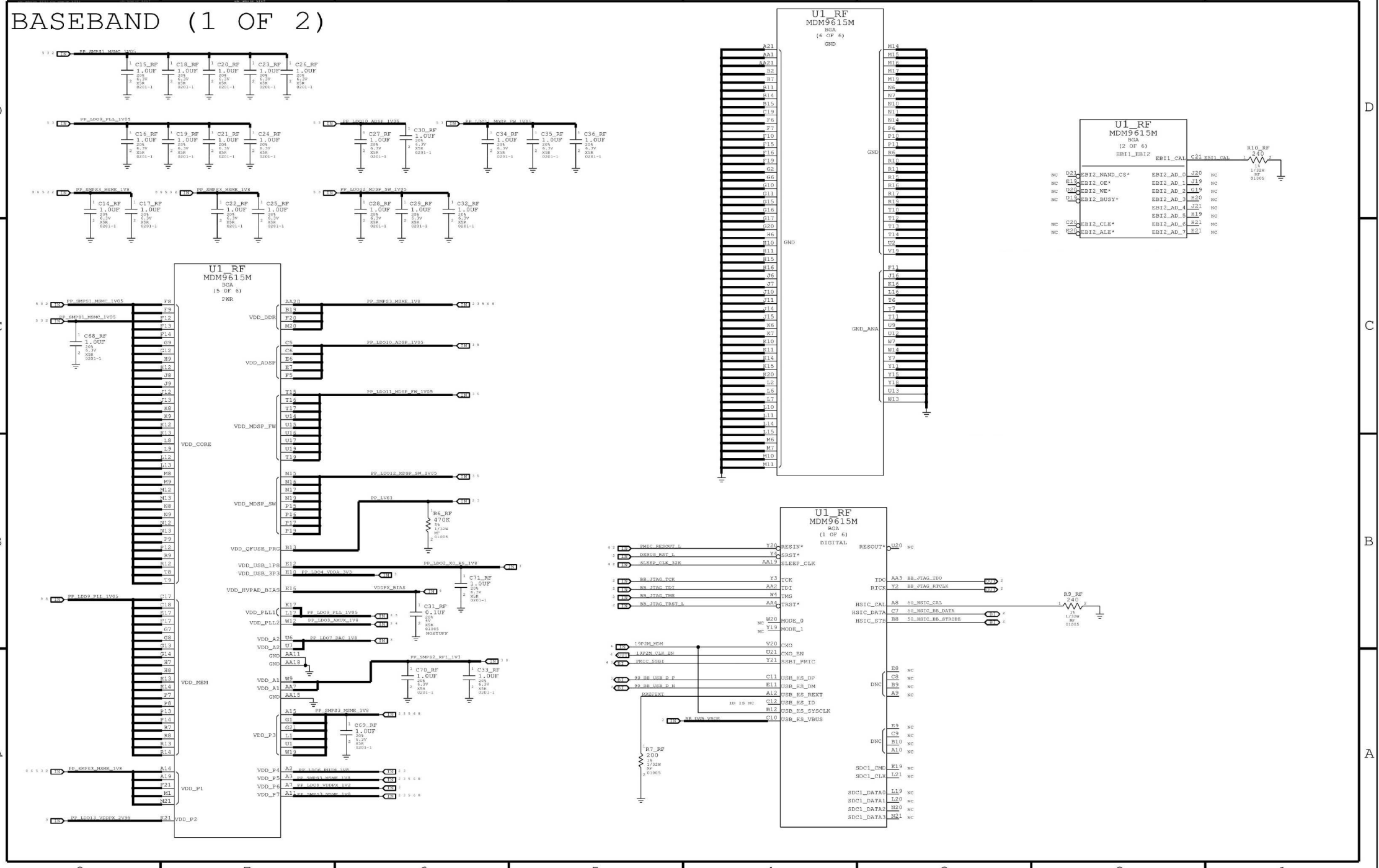

BASEBAND (2 OF 2)

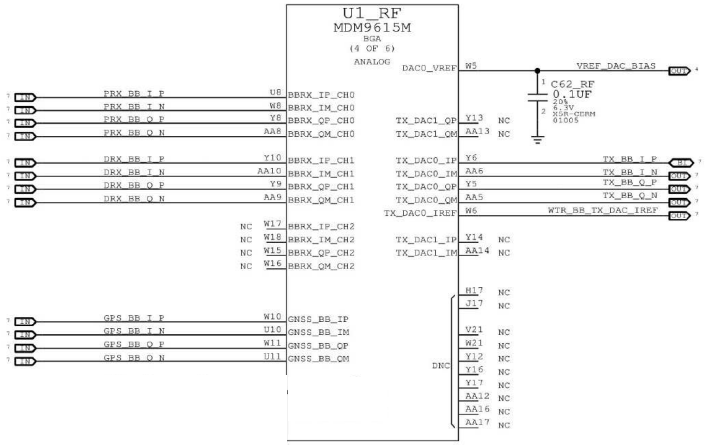

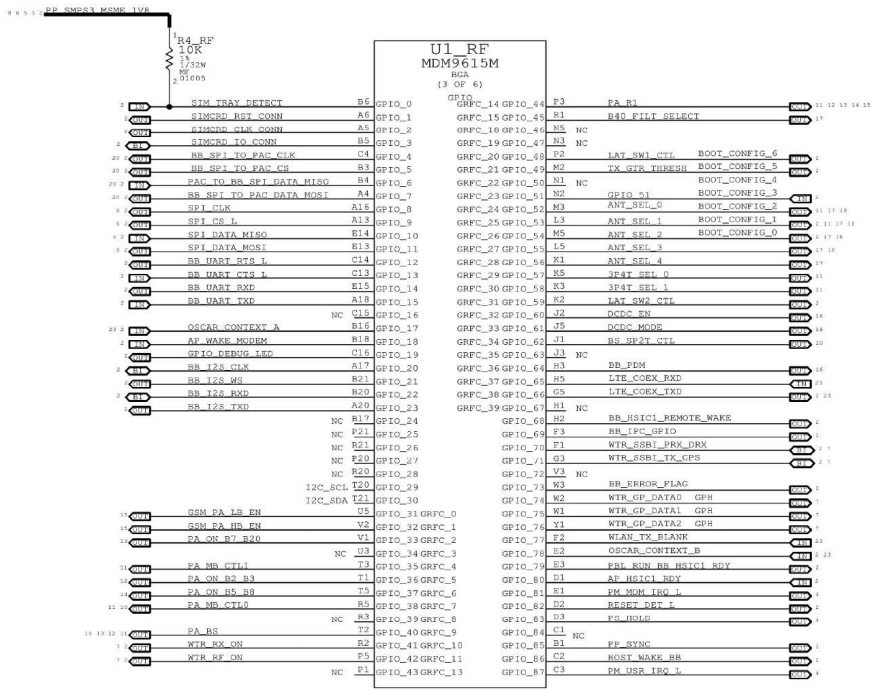

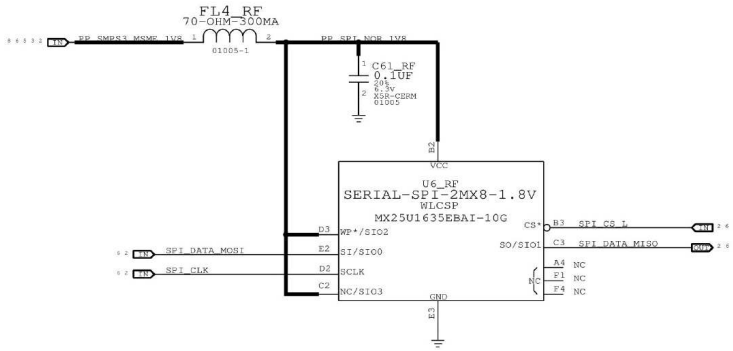

RF TRANSCEIVER (1 OF 2)

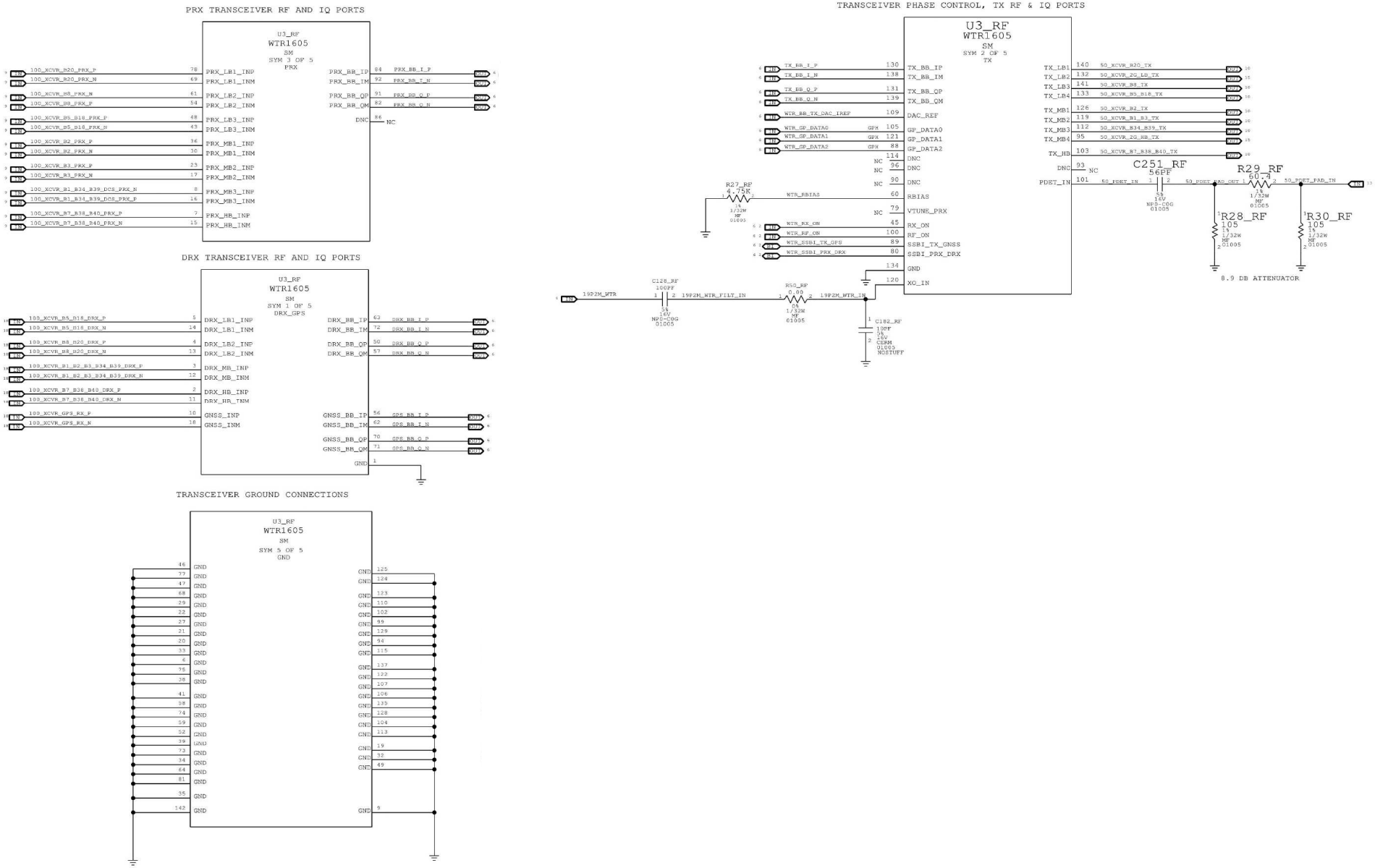

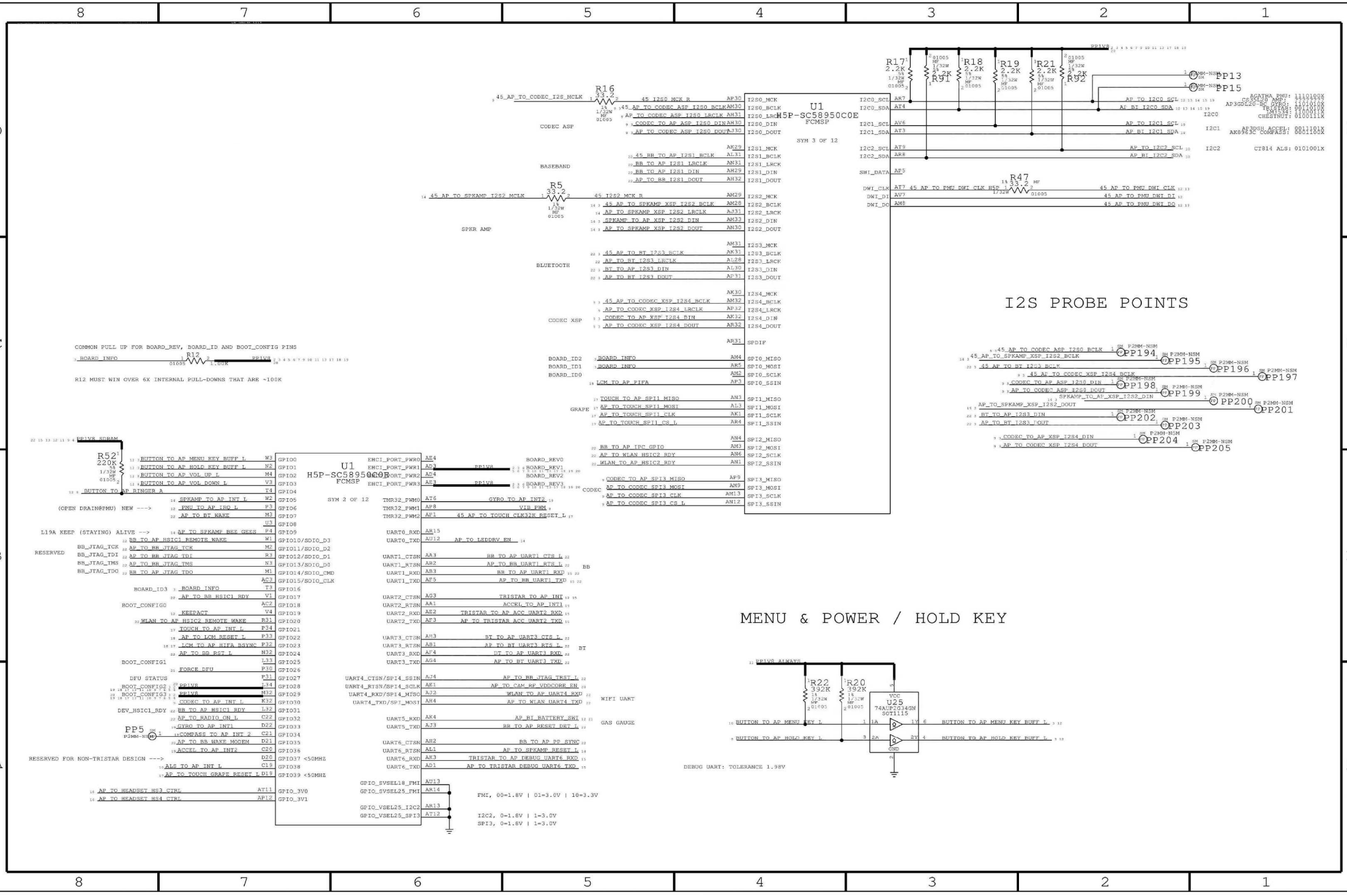
U1
H5P-SC58950C0E
FCMSP
SYM 3 OF 12
SYM 2 OF 12
I2S PROBE POINTS
MENU & POWER / HOLD KEY
CODEC ASP
BASEBAND
SPKR AMP
BLUETOOTH
CODEC XSP
GRAPE
CODEC
BB
BT
WIFI UART
GAS GAUGE
RESERVED
COMMON PULL UP FOR BOARD_REV, BOARD_ID AND BOOT_CONFIG PINS
R12 MUST WIN OVER 6X INTERNAL PULL-DOWNS THAT ARE ~100K
(OPEN DRAIN@PMU) NEW --->
L19A KEEP (STAYING) ALIVE -->
RESERVED FOR NON-TRISTAR DESIGN --->
DEBUG UART: TOLERANCE 1.98V
FMI, 00=1.8V | 01=3.0V | 10=3.3V
I2C2, 0=1.8V | 1=3.0V
SPI3, 0=1.8V | 1=3.0V

RF TRANSCEIVER (2 OF 2)

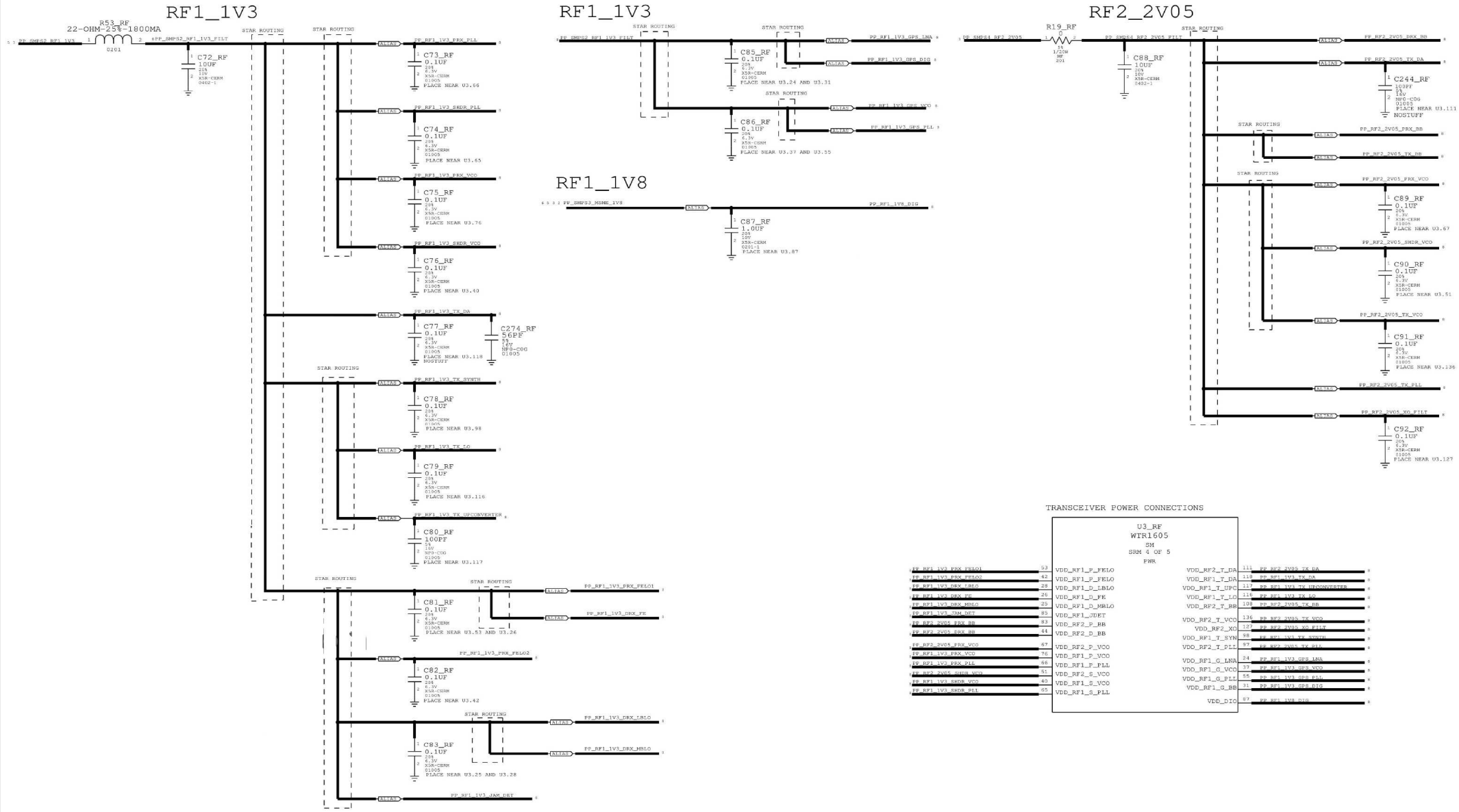

RX MATCHING

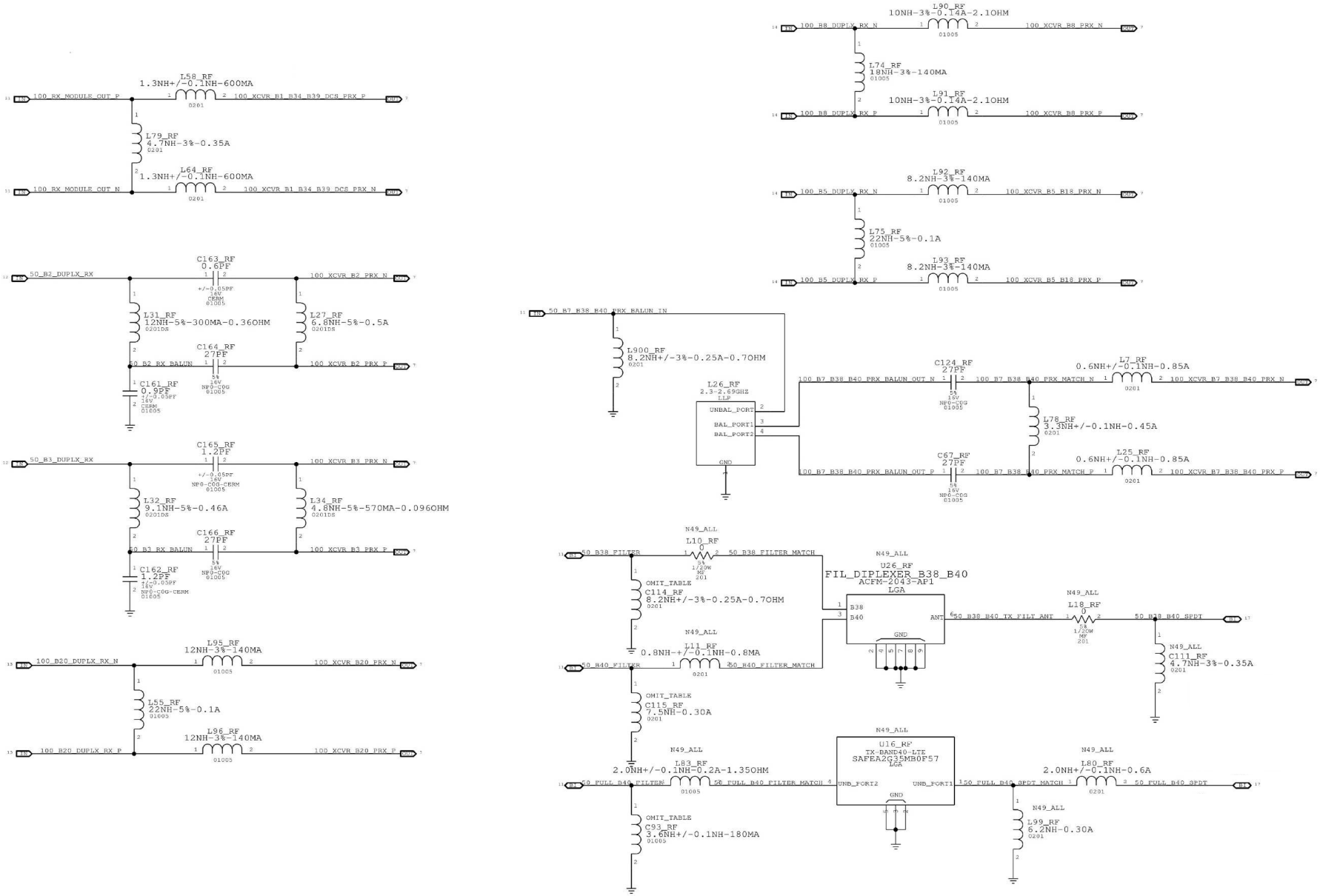
L58_RF
1.3NH+/-0.1NH-600MA
0201
100_RX_MODULE_OUT_P
100_XCVR_B1_B34_B39_DCS_PRX_P
L79_RF
4.7NH-3%-0.35A
0201
L64_RF
1.3NH+/-0.1NH-600MA
0201
100_RX_MODULE_OUT_N
100_XCVR_B1_B34_B39_DCS_PRX_N
C163_RF
0.6PF
+/-0.05PF
16V
CERM
01005
50_B2_DUPLX_RX
100_XCVR_B2_PRX_N
L31_RF
12NH-5%-300MA-0.36OHM
0201DS
L27_RF
6.8NH-5%-0.5A
0201DS
C164_RF
27PF
5%
16V
NP0-C0G
01005
50_B2_RX_BALUN
100_XCVR_B2_PRX_P
C161_RF
0.9PF
+/-0.05PF
16V
CERM
01005
C165_RF
1.2PF
+/-0.05PF
16V
NP0-C0G-CERM
01005
50_B3_DUPLX_RX
100_XCVR_B3_PRX_N
L32_RF
9.1NH-5%-0.46A
0201DS
L34_RF
4.6NH-5%-570MA-0.096OHM
0201DS
C166_RF
27PF
5%
16V
NP0-C0G
01005
50_B3_RX_BALUN
100_XCVR_B3_PRX_P
C162_RF
1.2PF
+/-0.05PF
16V
NP0-C0G-CERM
01005
L95_RF
12NH-3%-140MA
01005
100_B20_DUPLX_RX_N
100_XCVR_B20_PRX_N
L55_RF
22NH-5%-0.1A
01005
L96_RF
12NH-3%-140MA
01005
100_B20_DUPLX_RX_P
100_XCVR_B20_PRX_P
L90_RF
10NH-3%-0.14A-2.1OHM
01005
100_B8_DUPLX_RX_N
100_XCVR_B8_PRX_N
L74_RF
18NH-3%-140MA
01005
L91_RF
10NH-3%-0.14A-2.1OHM
01005
100_B8_DUPLX_RX_P
100_XCVR_B8_PRX_P
L92_RF
8.2NH-3%-140MA
01005
100_B5_DUPLX_RX_N
100_XCVR_B5_B18_PRX_N
L75_RF
22NH-5%-0.1A
01005
L93_RF
8.2NH-3%-140MA
01005
100_B5_DUPLX_RX_P
100_XCVR_B5_B18_PRX_P
50_B7_B38_B40_PRX_BALUN_IN
L900_RF
8.2NH+/-3%-0.25A-0.70HM
0201
L26_RF
2.3-2.69GHZ
LLP
UNBAL_PORT
BAL_PORT1
BAL_PORT2
GND
C124_RF
27PF
5%
16V
NP0-C0G
01005
100_B7_B38_B40_PRX_BALUN_OUT_N
100_B7_B38_B40_PRX_MATCH_N
L7_RF
0.6NH+/-0.1NH-0.85A
0201
100_XCVR_B7_B38_B40_PRX_N
L78_RF
3.3NH+/-0.1NH-0.45A
0201
C67_RF
27PF
5%
16V
NP0-C0G
01005
100_B7_B38_B40_PRX_BALUN_OUT_P
100_B7_B38_B40_PRX_MATCH_P
L25_RF
0.6NH+/-0.1NH-0.85A
0201
100_XCVR_B7_B38_B40_PRX_P
N49_ALL
L10_RF
0
5%
1/20W
MF
201
50_B38_FILTER
50_B38_FILTER_MATCH
OMIT_TABLE
C114_RF
8.2NH+/-3%-0.25A-0.70HM
0201
N49_ALL
U26_RF
FIL_DIPLEXER_B38_B40
ACFM-2043-AP1
LGA
B38
B40
ANT
GND
50_B38_B40_TX_FILT_ANT
N49_ALL
L18_RF
0
5%
1/20W
MF
201
50_B38_B40_SPDT
N49_ALL
C111_RF
4.7NH-3%-0.35A
0201
N49_ALL
L11_RF
0.8NH-+/-0.1NH-0.8MA
0201
50_B40_FILTER
50_B40_FILTER_MATCH
OMIT_TABLE
C115_RF
7.5NH-0.30A
0201
N49_ALL
U16_RF
TX-BAND40-LTE
SAFEA2G35MB0F57
LGA
UNB_PORT2
UNB_PORT1
GND
N49_ALL
L83_RF
2.0NH+/-0.1NH-0.2A-1.35OHM
01005
50_FULL_B40_FILTER
50_FULL_B40_FILTER_MATCH
50_FULL_B40_SPDT_MATCH
N49_ALL
L80_RF
2.0NH+/-0.1NH-0.6A
0201
50_FULL_B40_SPDT
OMIT_TABLE
C93_RF
3.6NH+/-0.1NH-180MA
01005
N49_ALL
L99_RF
6.2NH-0.30A
0201

TX INTERSTAGE FILTERS

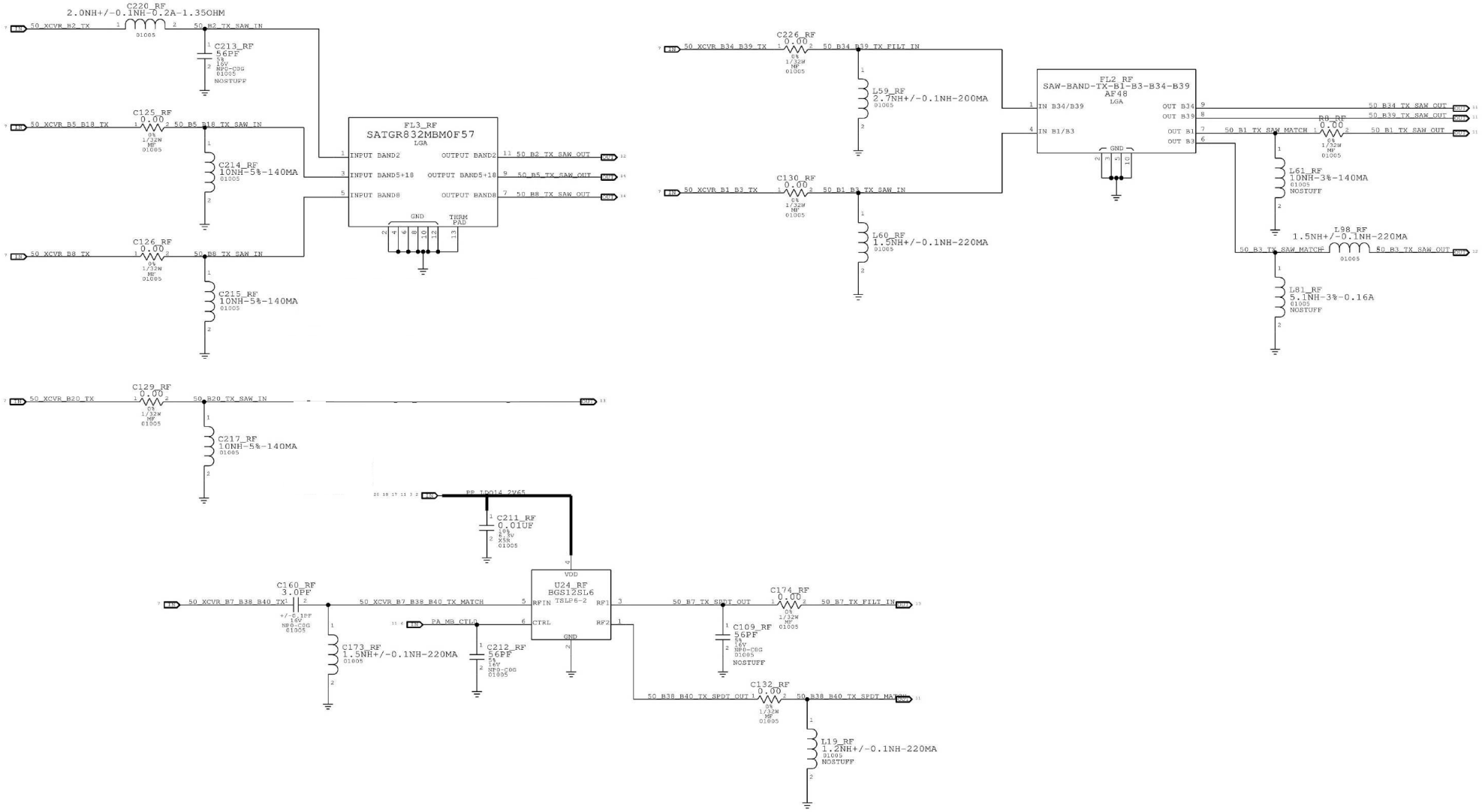

BAND 1/34/39/38/40 TX

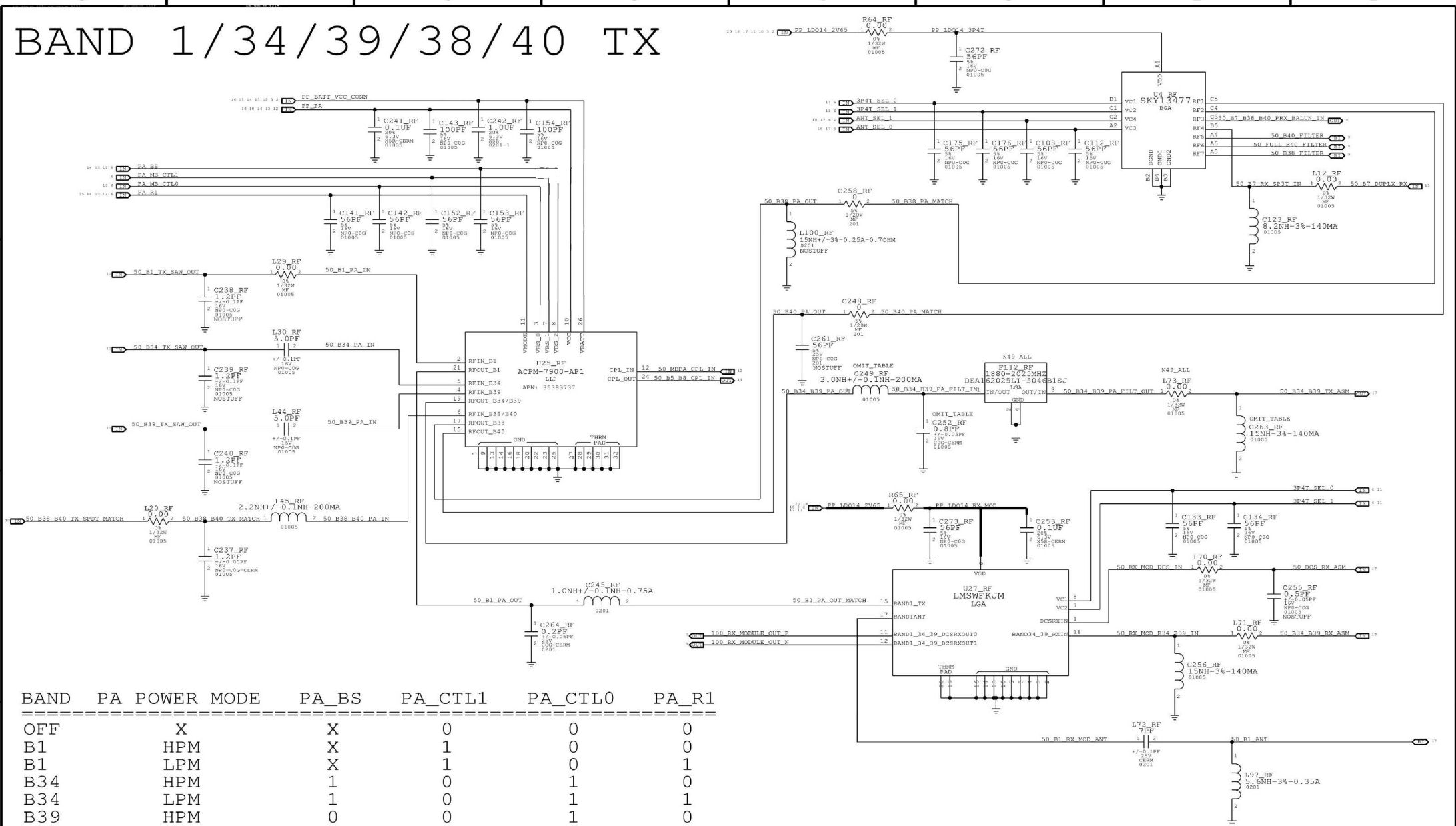

BAND	PA POWER MODE	PA_BS	PA_CTL1	PA_CTL0	PA_R1
OFF	X	X	0	0	0
B1	HPM	X	1	0	0
B1	LPM	X	1	0	1
B34	HPM	1	0	1	0
B34	LPM	1	0	1	1
B39	HPM	0	0	1	0
B39	LPM	0	0	1	1
B38	HPM	1	1	1	0
B38	LPM	1	1	1	1
B40	HPM	0	1	1	0
B40	LPM	0	1	1	1

BAND 2/3 PAD

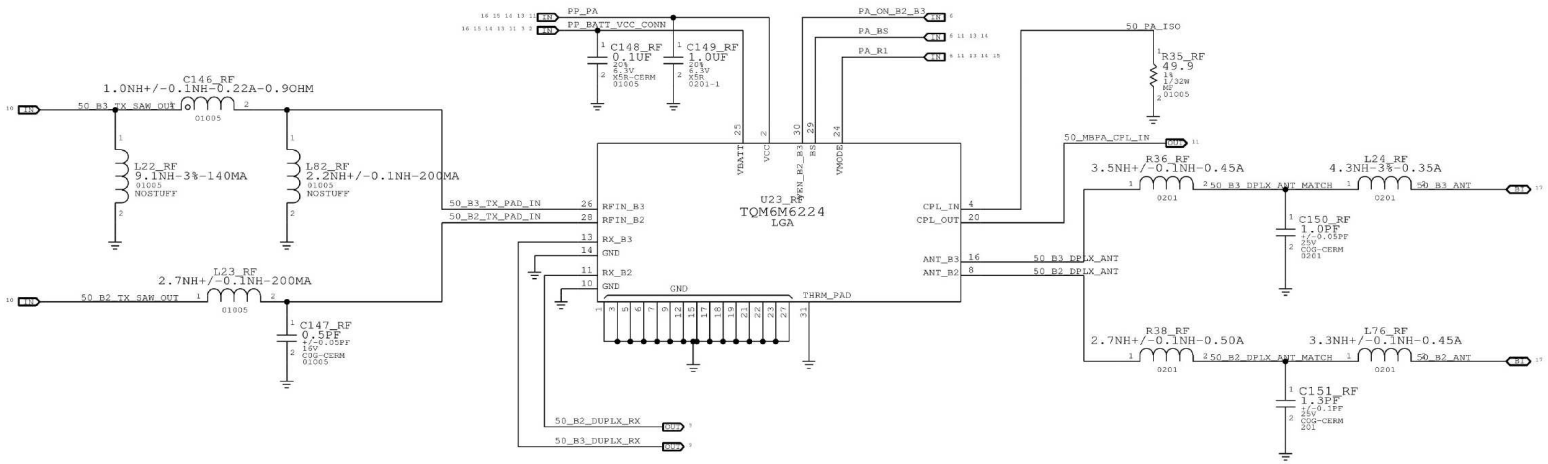

BAND	PA POWER MODE	PA_BS	PA_ON_B2_B3	PA_R1
OFF	X	X	0	X
B3	HPM	0	1	0
B3	LPM	0	1	1
B2	HPM	1	1	0
B2	LPM	1	1	1

BAND 20/7 PAD

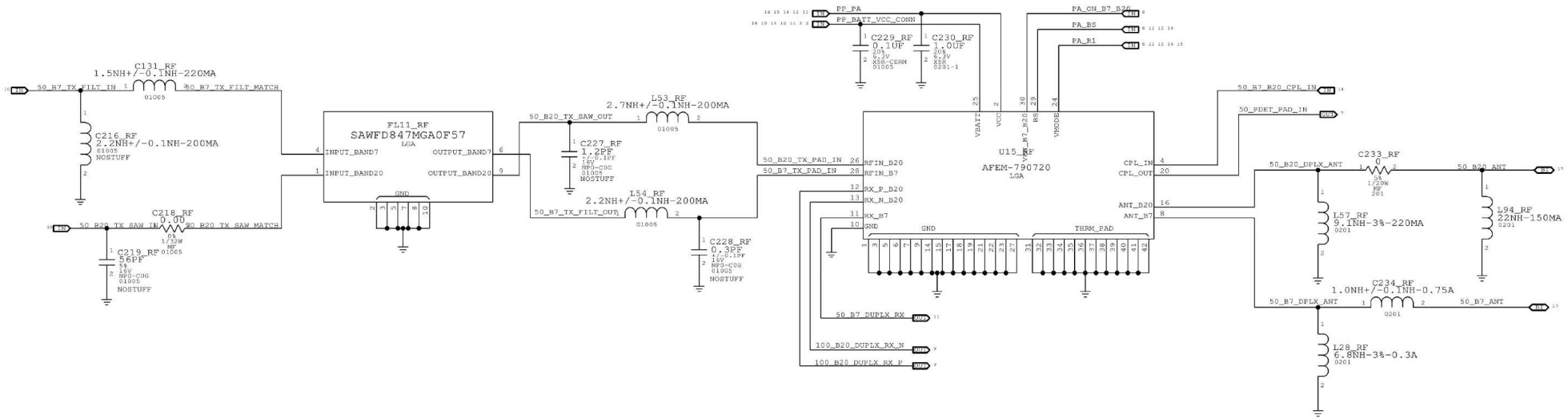

BAND	PA POWER MODE	PA_BS	PA_ON_B20_B7	PA_R1
OFF	X	X	0	X
B20	HPM	0	1	0
B20	LPM	0	1	1
B7	HPM	1	1	0
B7	LPM	1	1	1

BAND 5/8 PAD

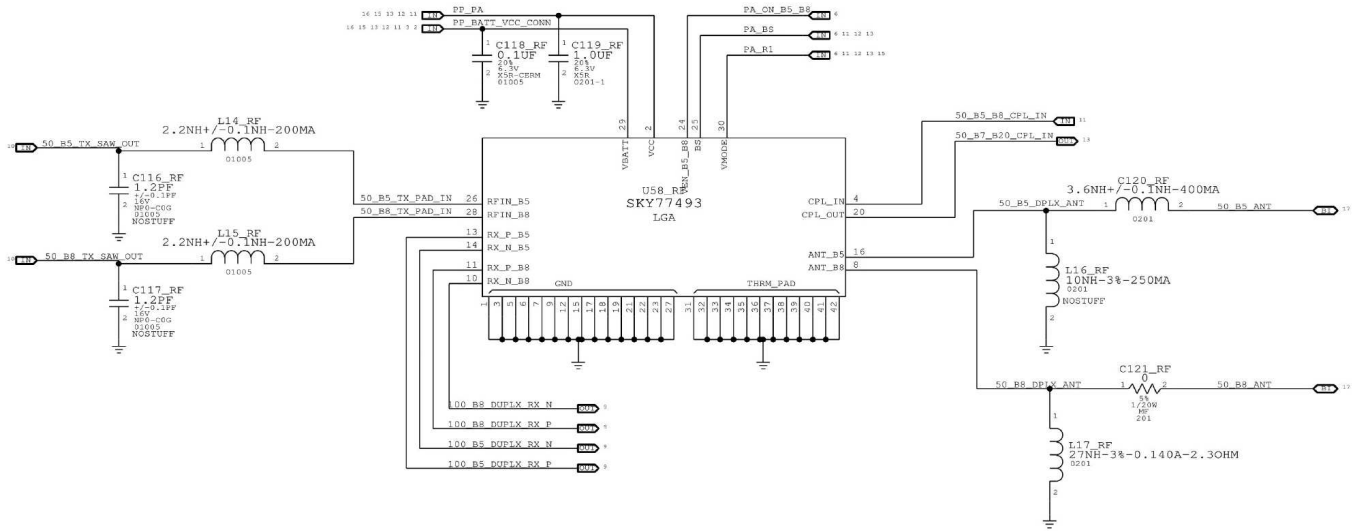

BAND	PA POWER MODE	PA_BS	PA_ON_B5_B8	PA_R1
OFF	X	X	0	X
B5	HPM	0	1	0
B5	LPM	0	1	1
B8	HPM	1	1	0
B8	LPM	1	1	1

2G PA

CONFIDENTIAL AND PROPRIETARY APPLE SYSTEM DESIGN. FOR REFERENCE PURPOSES ONLY - NOT A CHANGE REQUEST.

2G PA GAIN MODES

BAND	MODE	GAIN MODE	PA_R1	PCL RANGE
LOW BAND	GSM	ULTRA LOW	HIGH	16 TO 19
LOW BAND	GSM	LOW	HIGH	14 TO 15
LOW BAND	GSM	MEDIUM	LOW	7 TO 13
LOW BAND	GSM	HIGH	LOW	5 TO 6
HIGH BAND	GSM	ULTRA LOW	HIGH	10 TO 15
HIGH BAND	GSM	LOW	HIGH	7 TO 9
HIGH BAND	GSM	HIGH	LOW	0 TO 6
LOW BAND	EDGE	LOW	HIGH	15 TO 19
LOW BAND	EDGE	MEDIUM	LOW	10 TO 14
LOW BAND	EDGE	HIGH	LOW	8 TO 9
HIGH BAND	EDGE	LOW	HIGH	9 TO 15
HIGH BAND	EDGE	HIGH	LOW	2 TO 8

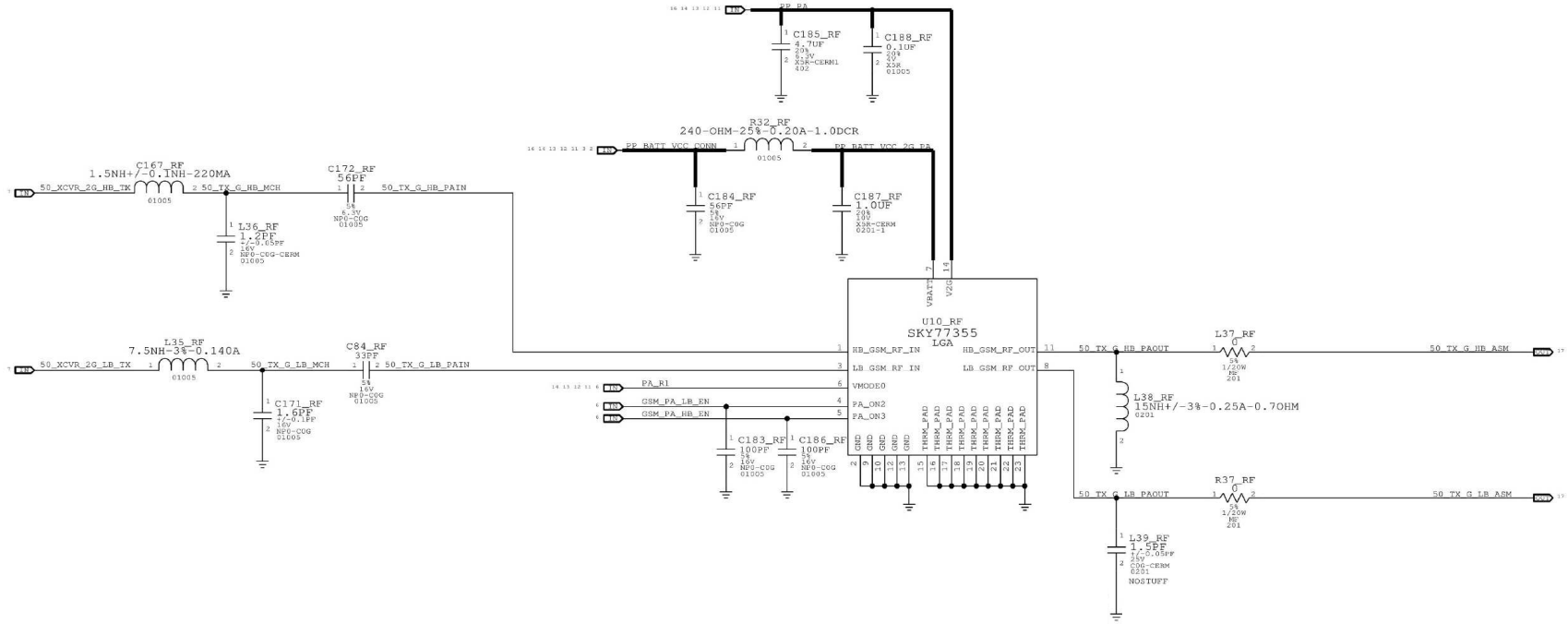

PA DC/DC CONVERTER

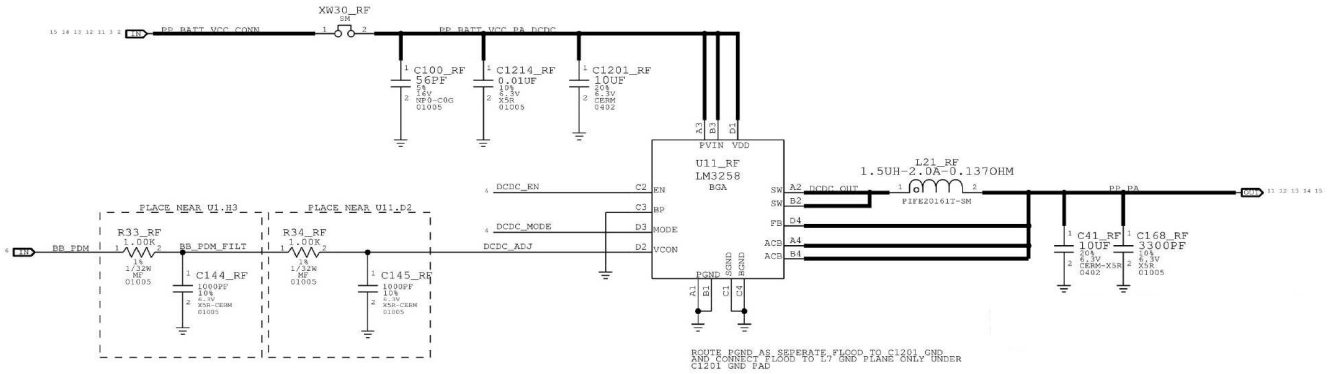

PRIMARY ASM

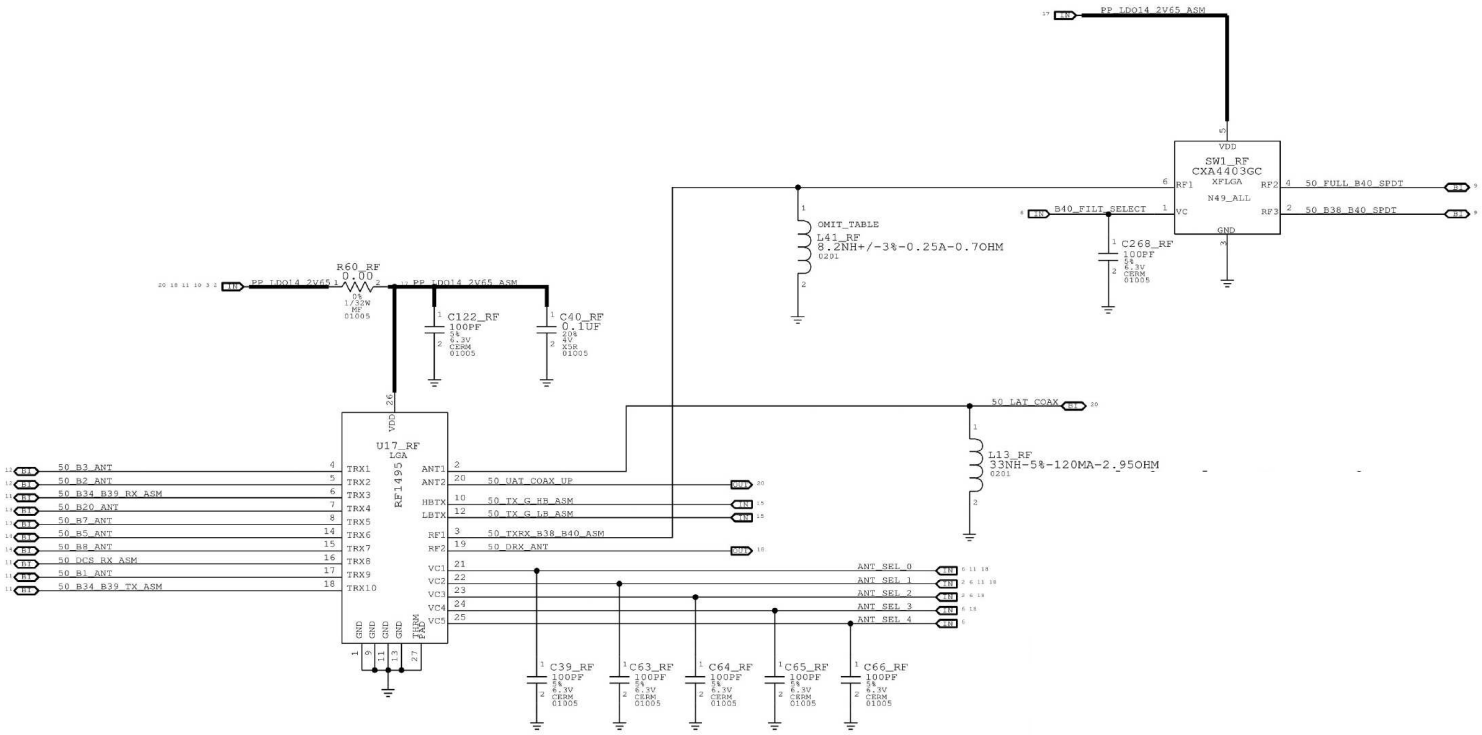
PP_LDO14_2V65_ASM
SW1_RF
CXA4403GC
XFLGA
N49_ALL
VDD
GND
RF1
RF2
RF3
VC
50_FULL_B40_SPDT
50_B38_B40_SPDT
B40_FILT_SELECT
C268_RF
100PF
OMIT_TABLE
L41_RF
8.2NH+/-3%-0.25A-0.7OHM
0201
R60_RF
0.00
1/32W
RF
01005
C122_RF
100PF
5%
6.3V
CERM
01005
C40_RF
0.1UF
20%
X5R
01005
50_LAT_COAX
L13_RF
33NH-5%-120MA-2.95OHM
0201
U17_RF
LGA
RF1495
50_B3_ANT
50_B2_ANT
50_B34_B39_RX_ASM
50_B20_ANT
50_B7_ANT
50_B5_ANT
50_B8_ANT
50_DCS_RX_ASM
50_B1_ANT
50_B34_B39_TX_ASM
TRX1
TRX2
TRX3
TRX4
TRX5
TRX6
TRX7
TRX8
TRX9
TRX10
ANT1
ANT2
HBTX
LBTX
RF1
RF2
VC1
VC2
VC3
VC4
VC5
50_UAT_COAX_UP
50_TX_G_HB_ASM
50_TX_G_LB_ASM
50_TXRX_B38_B40_ASM
50_DRX_ANT
ANT_SEL_0
ANT_SEL_1
ANT_SEL_2
ANT_SEL_3
ANT_SEL_4
GND
THERM PAD
C39_RF
C63_RF
C64_RF
C65_RF
C66_RF
100PF
5%
6.3V
CERM
01005

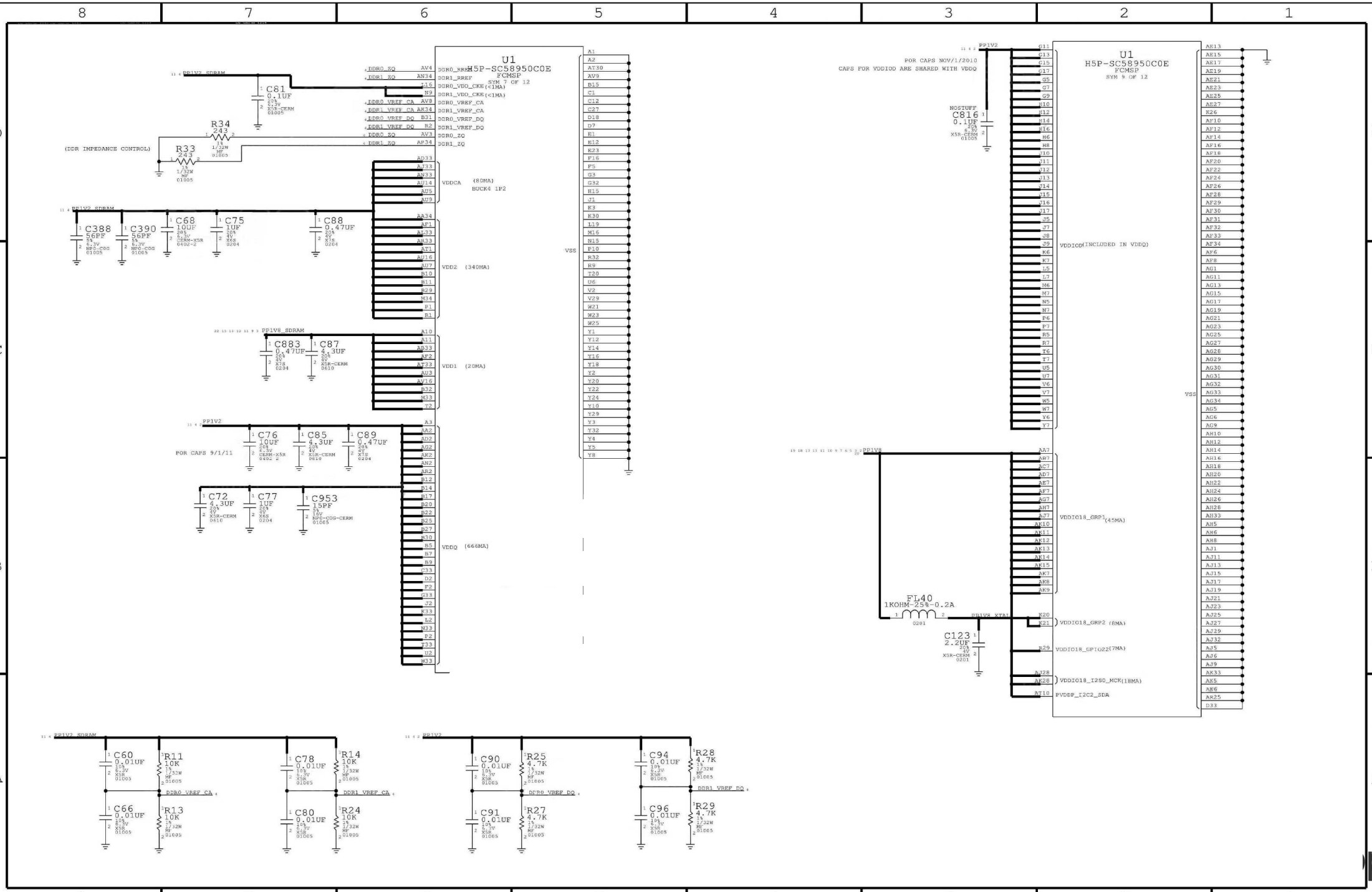
U1
H5P-SC58950C0E
FCMSP
SYM 7 OF 12
U1
H5P-SC58950C0E
FCMSP
SYM 9 OF 12
PP1V2_SDRAM
C81 0.1UF 20% 6.3V X5R-CERM 01005
R34 243 1% 1/32W MF 01005
R33 243 1% 1/32W MF 01005
(DDR IMPEDANCE CONTROL)
DDR0_ZQ
DDR1_ZQ
DDR0_RREF
DDR1_RREF
DDR0_VDD_CKE(<1MA)
DDR1_VDD_CKE(<1MA)
DDR0_VREF_CA
DDR1_VREF_CA
DDR0_VREF_DQ
DDR1_VREF_DQ
VDDCA (80MA)
BUCK4 1P2
C388 56PF 5% 6.3V NPO-COG 01005
C390 56PF 5% 6.3V NPO-COG 01005
C68 10UF 20% 6.3V CERM-X5R 0402-2
C75 1UF 20% 4V X6S 0204
C88 0.47UF 20% 4V X7S 0204
VDD2 (340MA)
PP1V8_SDRAM
C883 0.47UF 20% 4V X7S 0204
C87 4.3UF 20% 4V X5R-CERM 0610
VDD1 (20MA)
PP1V2
C76 10UF 20% 6.3V CERM-X5R 0402 2
C85 4.3UF 20% 4V X5R-CERM 0610
C89 0.47UF 20% 4V X7S 0204
POR CAPS 9/1/11
C72 4.3UF 20% 4V X5R-CERM 0610
C77 1UF 20% 4V X6S 0204
C953 15PF 5% 16V NPO-COG-CERM 01005
VDDQ (666MA)
VSS
POR CAPS NOV/1/2010
CAPS FOR VDDIOD ARE SHARED WITH VDDQ
NOSTUFF
C816 0.1UF 20% 6.3V X5R-CERM 01005
VDDIOD(INCLUDED IN VDDQ)
PP1V8
VDDIO18_GRP1 (45MA)
FL40
1KOHM-25%-0.2A
0201
PP1V8_XTAL
C123 2.2UF 20% 4V X5R-CERM 0201
VDDIO18_GRP2 (8MA)
VDDIO18_GPIO22(7MA)
VDDIO18_I2S0_MCK(18MA)
FVDDP_I2C2_SDA
C60 0.01UF 10% 6.3V X5R 01005
R11 10K 1% 1/32W MF 01005
C66 0.01UF 10% 6.3V X5R 01005
R13 10K 1% 1/32W MF 01005
C78 0.01UF 10% 6.3V X5R 01005
R14 10K 1% 1/32W MF 01005
C80 0.01UF 10% 6.3V X5R 01005
R24 10K 1% 1/32W MF 01005
DDR0_VREF_CA
DDR1_VREF_CA
C90 0.01UF 10% 6.3V X5R 01005
R25 4.7K 1% 1/32W MF 01005
C91 0.01UF 10% 6.3V X5R 01005
R27 4.7K 1% 1/32W MF 01005
DDR0_VREF_DQ
C94 0.01UF 10% 6.3V X5R 01005
R28 4.7K 1% 1/32W MF 01005
C96 0.01UF 10% 6.3V X5R 01005
R29 4.7K 1% 1/32W MF 01005
DDR1_VREF_DQ

RX DIVERSITY

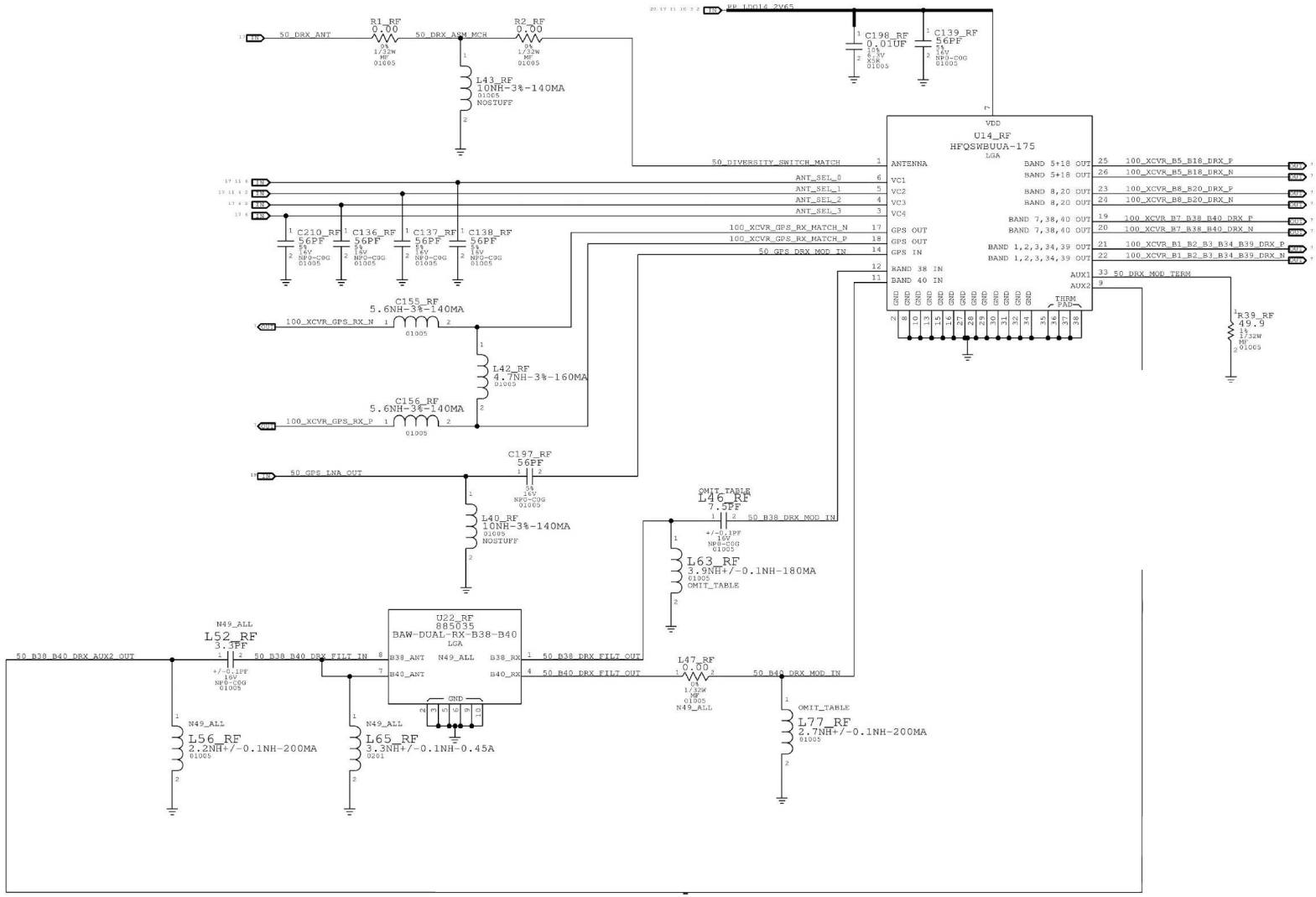

GPS

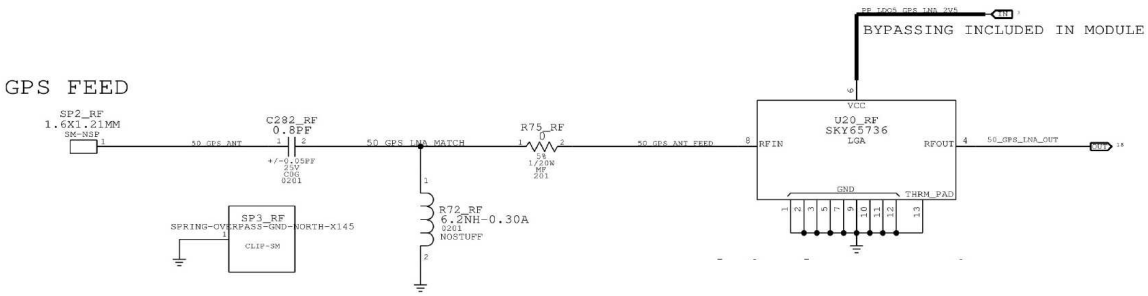
BYPASSING INCLUDED IN MODULE
GPS FEED
SP2_RF
1.6X1.21MM
SM-NSP
50_GPS_ANT
C282_RF
0.8PF
+/-0.05PF
25V
C0G
0201
50_GPS_LNA_MATCH
R75_RF
0
5%
1/20W
MF
201
50_GPS_ANT_FEED
VCC
U20_RF
SKY65736
LGA
RFIN
RFOUT
50_GPS_LNA_OUT
GND
THRM_PAD
SP3_RF
SPRING-OVERPASS-GND-NORTH-X145
CLIP-SM
R72_RF
6.2NH-0.30A
0201
NOSTUFF

ANTENNA FEEDS

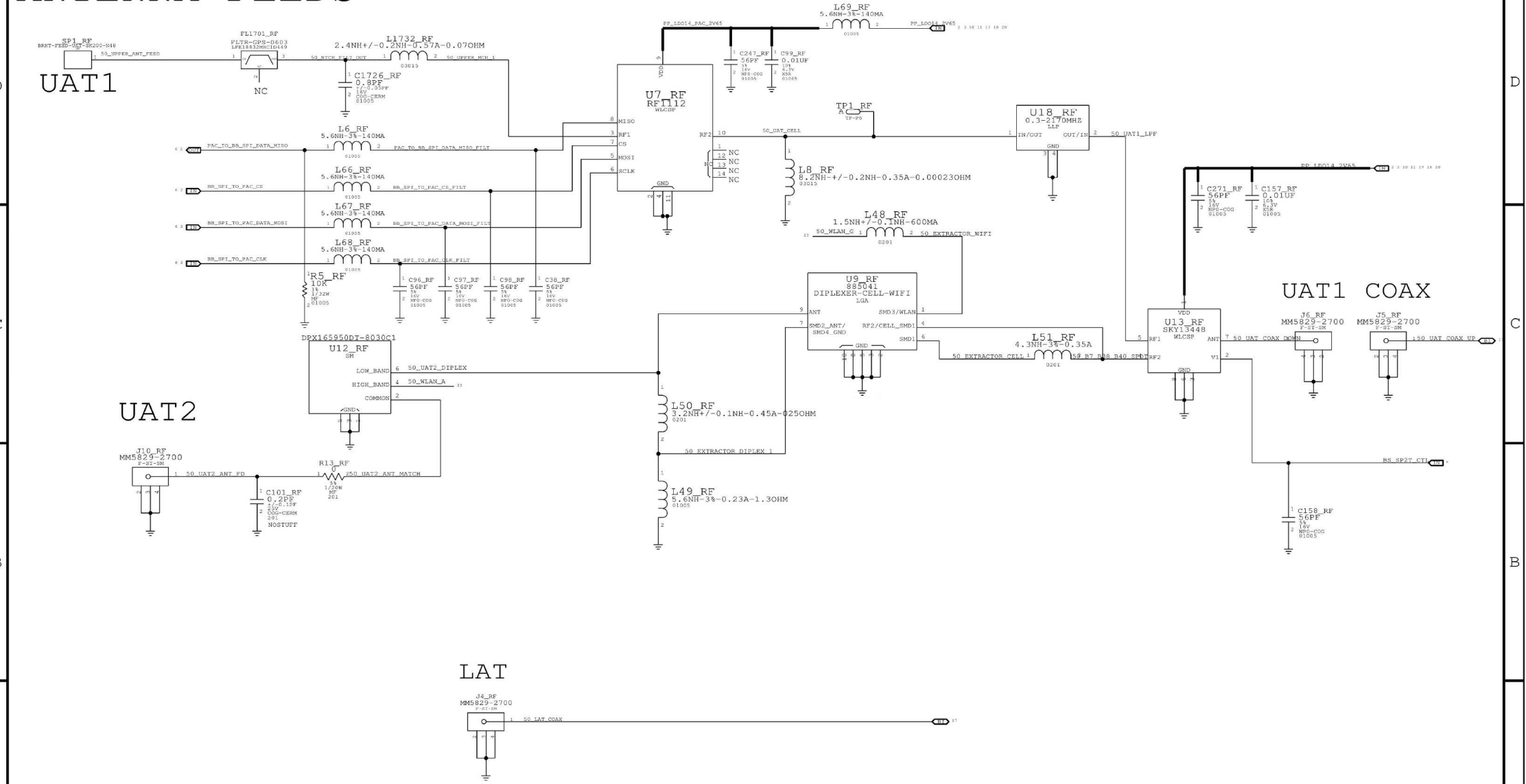

ANTENNA FEEDS (2 OF 2)

FRONT END LOGIC TABLE

BAND	ANT_SEL_0	ANT_SEL_1	ANT_SEL_2	ANT_SEL_3	ANT_SEL_4	PRX PATH	DRX PATH
GSM LB TX	LOW	HIGH	LOW	LOW	LOW	LAT	TERMINATED
GSM LB TX	LOW	HIGH	LOW	LOW	HIGH	UAT	TERMINATED
GSM HB TX	HIGH	HIGH	LOW	HIGH	LOW	LAT	TERMINATED
GSM HB TX	HIGH	HIGH	LOW	HIGH	HIGH	UAT	TERMINATED
B1	HIGH	HIGH	HIGH	HIGH	LOW	LAT	UAT
B1	HIGH	HIGH	HIGH	HIGH	HIGH	UAT	LAT
B2/B25, 1900RX	HIGH	LOW	LOW	HIGH	LOW	LAT	UAT
B2/B25, 1900RX	HIGH	LOW	LOW	HIGH	HIGH	UAT	LAT
B3	HIGH	HIGH	LOW	LOW	LOW	LAT	UAT
B3	HIGH	HIGH	LOW	LOW	HIGH	UAT	LAT
B5/B6/B18, 850RX	HIGH	LOW	LOW	LOW	LOW	LAT	UAT
B5/B6/B18, 850RX	HIGH	LOW	LOW	LOW	HIGH	UAT	LAT
B20	HIGH	LOW	HIGH	HIGH	LOW	LAT	UAT
B20	HIGH	LOW	HIGH	HIGH	HIGH	UAT	LAT
B34/B39 TX	LOW	LOW	HIGH	HIGH	LOW	LAT	TERMINATED
B34/B39 TX	LOW	LOW	HIGH	HIGH	HIGH	UAT	TERMINATED
B34 RX	LOW	LOW	LOW	HIGH	LOW	LAT	UAT
B34 RX	LOW	LOW	LOW	HIGH	HIGH	UAT	LAT
B39 RX	LOW	LOW	HIGH	LOW	LOW	LAT	UAT
B39 RX	LOW	LOW	HIGH	LOW	HIGH	UAT	LAT
B38/B40 TX	LOW	HIGH	HIGH	LOW	LOW	LAT	TERMINATED
B38/B40 TX	LOW	HIGH	HIGH	LOW	HIGH	UAT	TERMINATED
B38 RX	HIGH	LOW	HIGH	LOW	LOW	LAT	UAT
B38 RX	HIGH	LOW	HIGH	LOW	HIGH	UAT	LAT
B40 RX	HIGH	HIGH	HIGH	LOW	LOW	LAT	UAT
B40 RX	HIGH	HIGH	HIGH	LOW	HIGH	UAT	LAT
B7	LOW	HIGH	HIGH	HIGH	LOW	LAT	UAT
B7	LOW	HIGH	HIGH	HIGH	HIGH	UAT	LAT
B8, GSM900 RX	LOW	HIGH	LOW	HIGH	LOW	LAT	UAT
B8, GSM900 RX	LOW	HIGH	LOW	HIGH	HIGH	UAT	LAT
GSM1800 RX	LOW	LOW	LOW	LOW	LOW	LAT	TERMINATED
GSM1800 RX	LOW	LOW	LOW	LOW	HIGH	UAT	TERMINATED

LAT = LOWER ANTENNA
UAT = UPPER ANTENNA

WLAN/BT

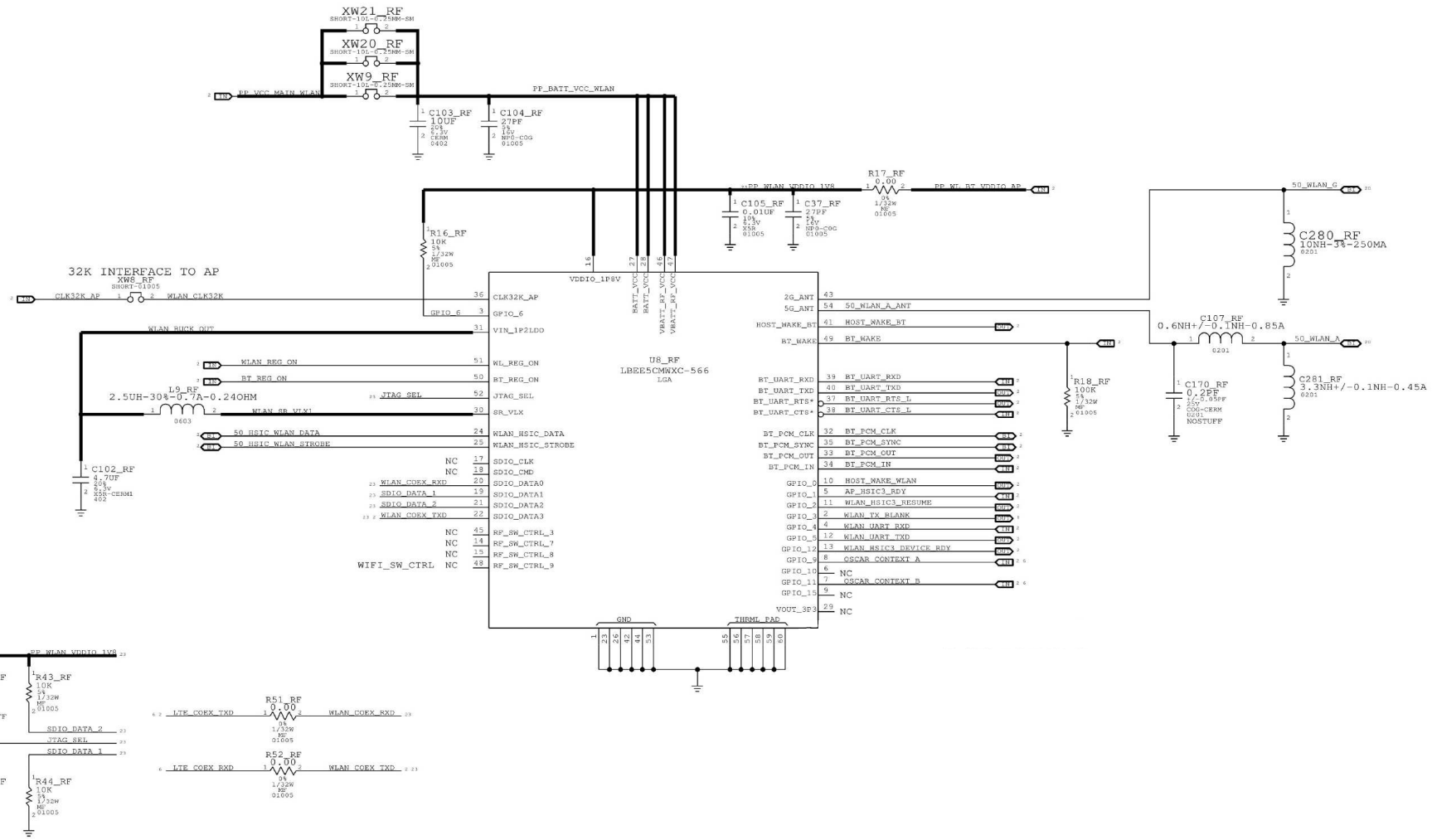
XW21_RF
XW20_RF
XW9_RF
PP_VCC_MAIN_WLAN
PP_BATT_VCC_WLAN
C103_RF 10UF
C104_RF 27PF
R17_RF 0.00
PP_WL_BT_VDDIO_AP
C105_RF 0.01UF
C37_RF 27PF
R16_RF 10K
32K INTERFACE TO AP
XW8_RF
CLK32K_AP
WLAN_CLK32K
WLAN_BUCK_OUT
WLAN_REG_ON
BT_REG_ON
L9_RF 2.5UH-30%-0.7A-0.24OHM
JTAG_SEL
WLAN_SR_VLX1
50_HSIC_WLAN_DATA
50_HSIC_WLAN_STROBE
C102_RF 4.7UF
U8_RF
LBEE5CMWXC-566
LGA
VDDIO_1P8V
BATT_VCC
VBATT_RF_VCC
VIN_1P2LDO
WL_REG_ON
BT_REG_ON
SR_VLX
WLAN_HSIC_DATA
WLAN_HSIC_STROBE
SDIO_CLK
SDIO_CMD
SDIO_DATA0
SDIO_DATA1
SDIO_DATA2
SDIO_DATA3
RF_SW_CTRL_3
RF_SW_CTRL_7
RF_SW_CTRL_8
RF_SW_CTRL_9
WIFI_SW_CTRL
2G_ANT
5G_ANT
50_WLAN_A_ANT
HOST_WAKE_BT
BT_WAKE
BT_UART_RXD
BT_UART_TXD
BT_UART_RTS_L
BT_UART_CTS_L
BT_PCM_CLK
BT_PCM_SYNC
BT_PCM_OUT
BT_PCM_IN
HOST_WAKE_WLAN
AP_HSIC3_RDY
WLAN_HSIC3_RESUME
WLAN_TX_BLANK
WLAN_UART_RXD
WLAN_UART_TXD
WLAN_HSIC3_DEVICE_RDY
OSCAR_CONTEXT_A
OSCAR_CONTEXT_B
VOUT_3P3
GND
THRML_PAD
50_WLAN_G
C280_RF 10NH-3%-250MA
C107_RF 0.6NH+/-0.1NH-0.85A
50_WLAN_A
C281_RF 3.3NH+/-0.1NH-0.45A
R18_RF 100K
C170_RF 0.2PF
R14_RF 10K
R43_RF 10K
R15_RF 10K
R44_RF 10K
SDIO_DATA_2
JTAG_SEL
SDIO_DATA_1
R51_RF 0.00
LTE_COEX_TXD
WLAN_COEX_RXD
R52_RF 0.00
LTE_COEX_RXD
WLAN_COEX_TXD

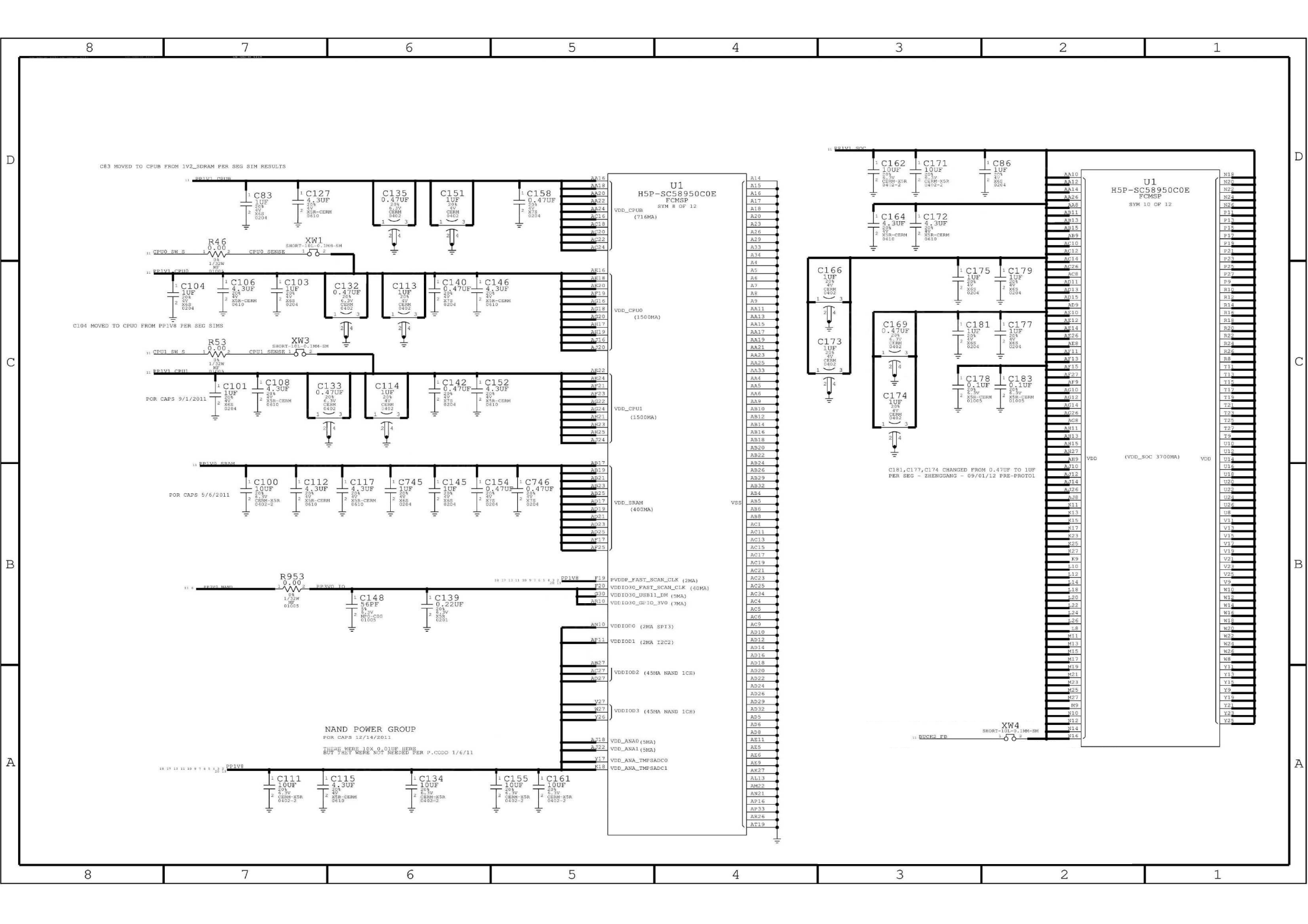
C83 MOVED TO CPUB FROM 1V2_SDRAM PER SEG SIM RESULTS
PP1V2_CPUB
C83 1UF 20% 4V X6S 0204
C127 4.3UF 20% 4V X5R-CERM 0610
C135 0.47UF 20% 6.3V CERM 0402
C151 1UF 20% 4V CERM 0402
C158 0.47UF 20% 4V X7S 0204
R46 0.0 0% 1/32W MF 01005
CPU0_SW_S
CPU0_SENSE
XW1 SHORT-101-0.1MM-SM
PP1V1_CPU0
C104 1UF 20% 4V X6S 0204
C106 4.3UF 20% 4V X5R-CERM 0610
C103 1UF 20% 4V X6S 0204
C132 0.47UF 20% 6.3V CERM 0402
C113 1UF 20% 4V CERM 0402
C140 0.47UF 20% 4V X7S 0204
C146 4.3UF 20% 4V X5R-CERM 0610
C104 MOVED TO CPU0 FROM PP1V8 PER SEG SIMS
R53 0.0 0% 1/32W MF 01005
CPU1_SW_S
CPU1_SENSE
XW3 SHORT-101-0.1MM-SM
PP1V1_CPU1
C101 1UF 20% 4V X6S 0204
C108 4.3UF 20% 4V X5R-CERM 0610
C133 0.47UF 20% 6.3V CERM 0402
C114 1UF 20% 4V CERM 0402
C142 0.47UF 20% 4V X7S 0204
C152 4.3UF 20% 4V X5R-CERM 0610
POR CAPS 9/1/2011
PP1V2_SRAM
C100 10UF 20% 6.3V CERM-X5R 0402-2
C112 4.3UF 20% 4V X5R-CERM 0610
C117 4.3UF 20% 4V X5R-CERM 0610
C745 1UF 20% 4V X6S 0204
C145 1UF 20% 4V X5R 0204
C154 0.47UF 20% 4V X7S 0204
C746 0.47UF 20% 4V X7S 0204
POR CAPS 5/6/2011
R953 0.0 0% 1/32W MF 01005
PP3V0_NAND
PP3V0_IO
C148 56PF 5% 6.3V NP0-C0G 01005
C139 0.22UF 20% 6.3V X5R 0201
PP1V8
C111 10UF 20% 6.3V CERM-X5R 0402-2
C115 4.3UF 20% 4V X5R-CERM 0610
C134 10UF 20% 6.3V CERM-X5R 0402-2
C155 10UF 20% 6.3V CERM-X5R 0402-2
C161 10UF 20% 6.3V CERM-X5R 0402-2
NAND POWER GROUP
POR CAPS 12/14/2011
THERE WERE 10X 0.01UF HERE
BUT THEY WERE NOT NEEDED PER P.CODD 1/6/11
U1
H5P-SC58950C0E
FCMSP
SYM 8 OF 12
VDD_CPUB (716MA)
VDD_CPU0 (1500MA)
VDD_CPU1 (1500MA)
VDD_SRAM (400MA)
VSS
PVDDP_FAST_SCAN_CLK (2MA)
VDDIO30_FAST_SCAN_CLK (40MA)
VDDIO30_USB11_DM (5MA)
VDDIO30_GPIO_3V0 (7MA)
VDDIOD0 (2MA SPI3)
VDDIOD1 (2MA I2C2)
VDDIOD2 (45MA NAND 1CH)
VDDIOD3 (45MA NAND 1CH)
VDD_ANA0 (5MA)
VDD_ANA1 (5MA)
VDD_ANA_TMPSADC0
VDD_ANA_TMPSADC1
PP1V1_SOC
C162 10UF 20% 6.3V CERM-X5R 0402-2
C171 10UF 20% 6.3V CERM-X5R 0402-2
C86 1UF 20% 4V X6S 0204
C164 4.3UF 20% 4V X5R-CERM 0610
C172 4.3UF 20% 4V X5R-CERM 0610
C166 1UF 20% 4V CERM 0402
C173 1UF 20% 4V CERM 0402
C175 1UF 20% 4V X6S 0204
C179 1UF 20% 4V X6S 0204
C169 0.47UF 20% 6.3V CERM 0402
C174 1UF 20% 4V CERM 0402
C181 1UF 20% 4V X6S 0204
C177 1UF 20% 4V X6S 0204
C178 0.1UF 20% 6.3V X5R-CERM 01005
C183 0.1UF 20% 6.3V X5R-CERM 01005
C181,C177,C174 CHANGED FROM 0.47UF TO 1UF
PER SEG - ZHENGGANG - 09/01/12 PRE-PROTO1
U1
H5P-SC58950C0E
FCMSP
SYM 10 OF 12
VDD
(VDD_SOC 3700MA)
VDD
XW4 SHORT-101-0.1MM-SM
BUCK8_FB

NAND

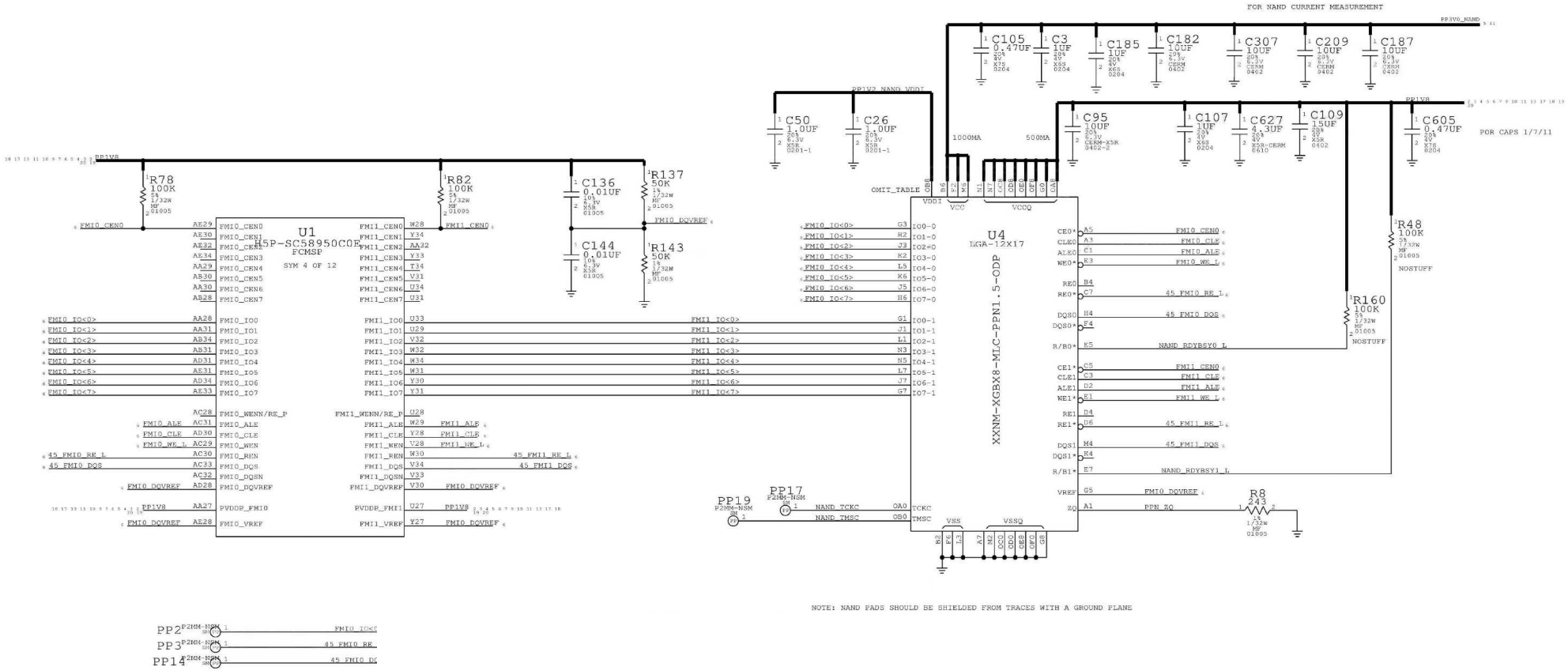

NOTE: NAND PADS SHOULD BE SHIELDED FROM TRACES WITH A GROUND PLANE

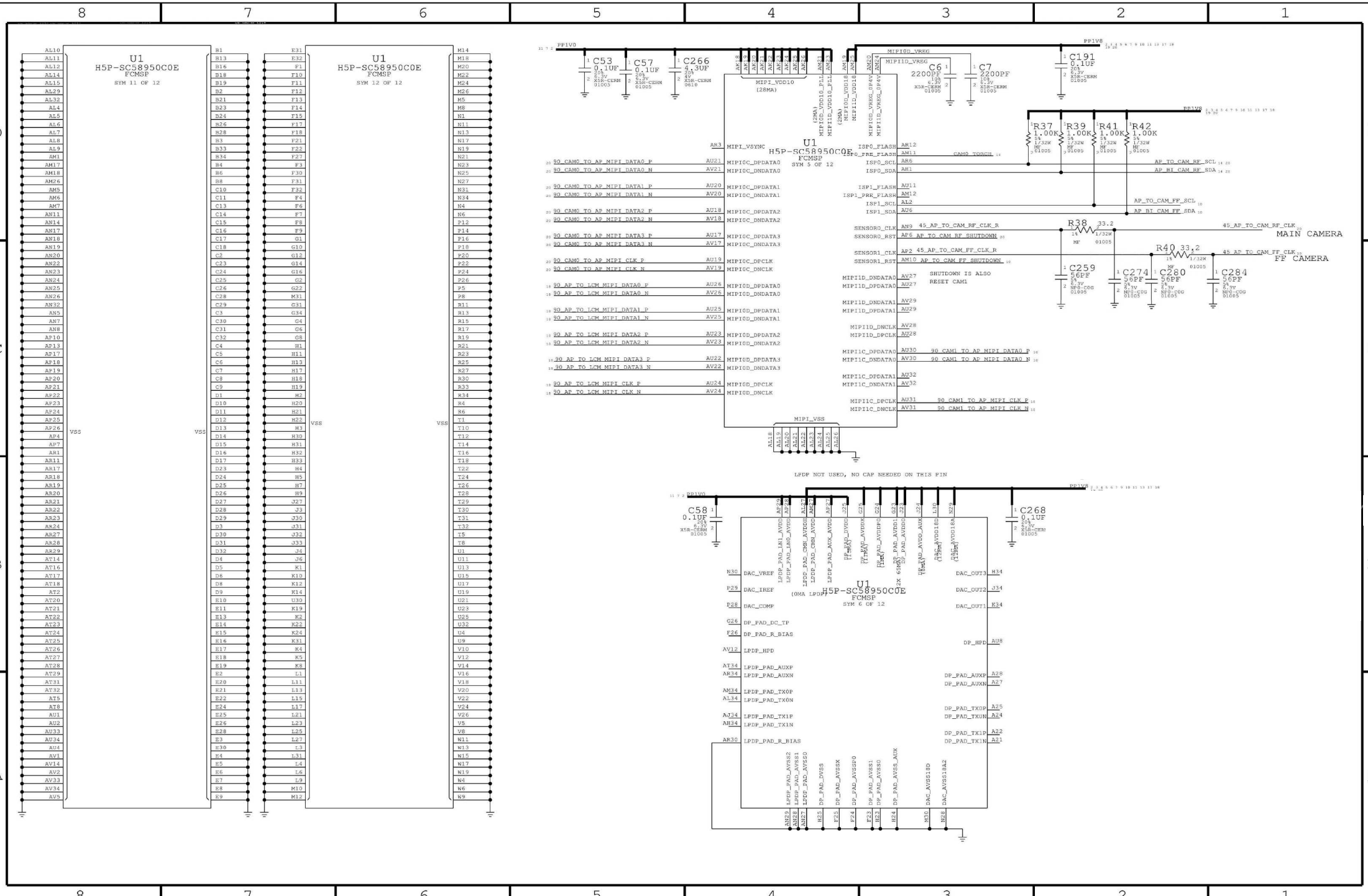
U1
H5P-SC58950C0E
FCMSP
SYM 11 OF 12
U1
H5P-SC58950C0E
FCMSP
SYM 12 OF 12
U1
H5P-SC58950C0E
FCMSP
SYM 5 OF 12
U1
H5P-SC58950C0E
FCMSP
SYM 6 OF 12
PP1V0
PP1V8
C53 0.1UF
C57 0.1UF
C266 4.3UF
C6 2200PF
C7 2200PF
C191 0.1UF
R37 1.00K
R39 1.00K
R41 1.00K
R42 1.00K
R38 33.2
R40 33.2
C259 56PF
C274 56PF
C280 56PF
C284 56PF
MAIN CAMERA
FF CAMERA
SHUTDOWN IS ALSO
RESET CAM1
LPDP NOT USED, NO CAP NEEDED ON THIS PIN
C58 0.1UF
C268 0.1UF
VSS

BUTTON FLEX (VIBE DRIVER, BUTTONS, ANC REF MIC, STROBE, STROBE_NTC)

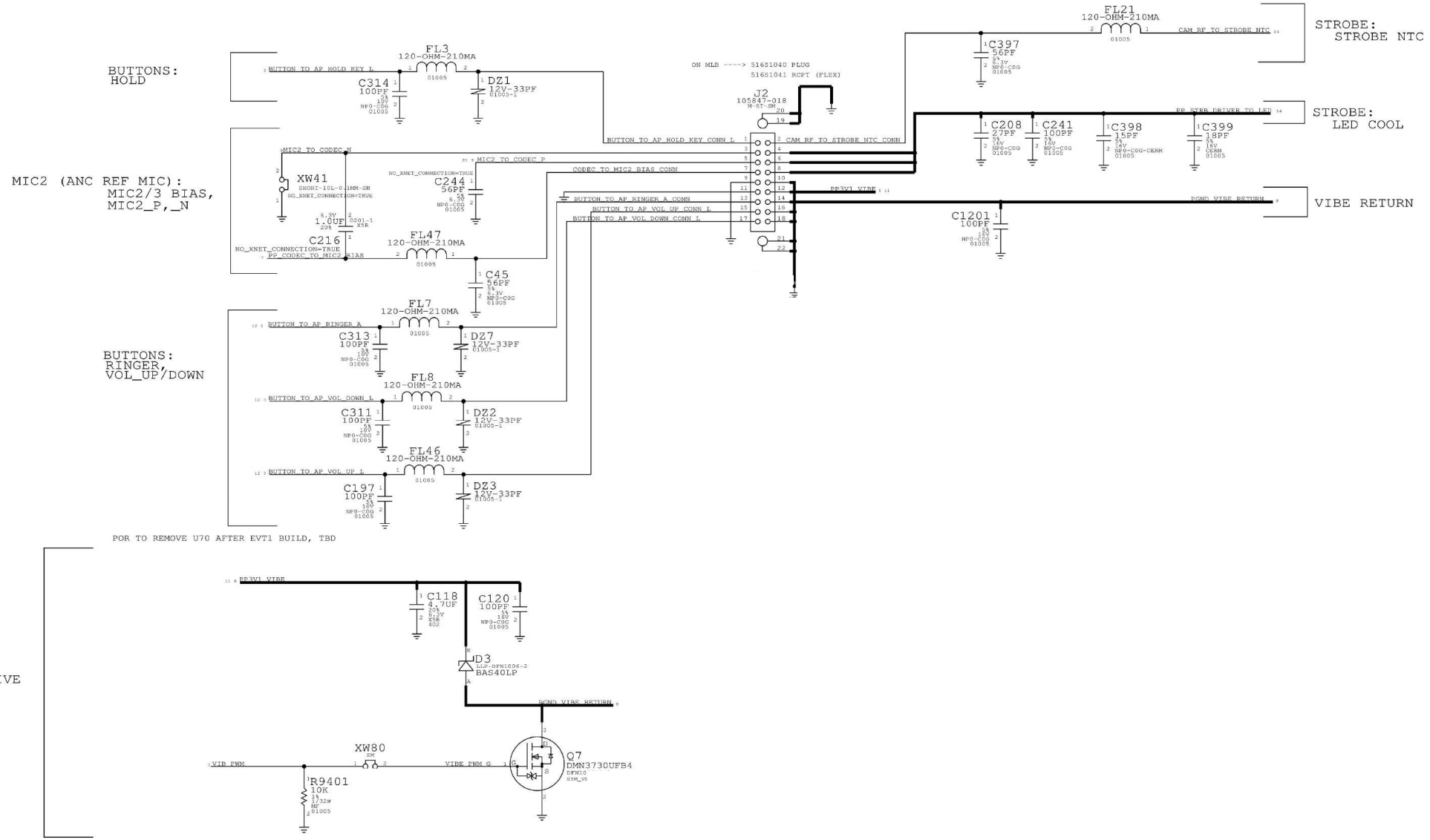

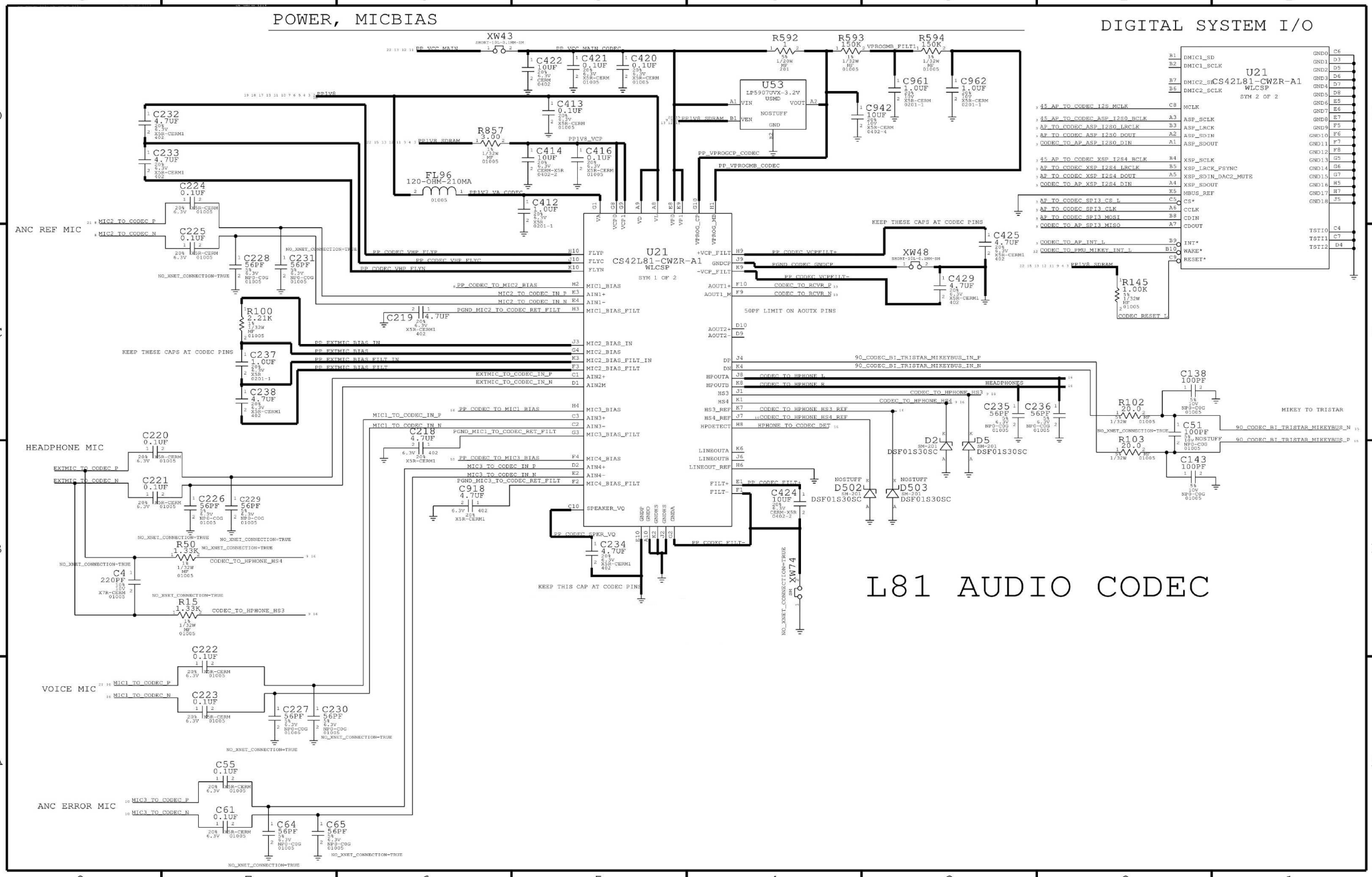
POWER, MICBIAS
DIGITAL SYSTEM I/O
U21
CS42L81-CWZR-A1
WLCSP
SYM 1 OF 2
SYM 2 OF 2
U53
LP5907UVX-3.2V
USMD
NOSTUFF
XW43
XW48
XW74
R592
R593
R594
R857
R100
R145
R50
R15
R102
R103
R50
C4
C51
C138
C143
C961
C962
C942
C413
C414
C416
C412
C422
C421
C420
C232
C233
C224
C225
C228
C231
C237
C238
C219
C220
C221
C226
C229
C218
C918
C234
C222
C223
C227
C230
C55
C61
C64
C65
C235
C236
C424
C425
C429
FL96
120-OHM-210MA
D2
D5
D502
D503
DSF01S30SC
ANC REF MIC
HEADPHONE MIC
VOICE MIC
ANC ERROR MIC
KEEP THESE CAPS AT CODEC PINS
KEEP THIS CAP AT CODEC PINS
50PF LIMIT ON AOUTX PINS
MIKEY TO TRISTAR
L81 AUDIO CODEC